USER MANUAL

GAS-1040

Oxides of Nitrogen Analyzer

Version 3.5

Met One Instruments

POWERED BY ACOEM

metone.com

Met One Instruments

POWERED BY ACOEM

Met One Instruments is now part of the Acoem Group. The Met One range of gas analyzers was originally developed by Acoem under the brand name Serinus®.

For the purposes of expediting the availability of Met One gas analyzers to Met One customers around the world; Met One Instruments have chosen to use the original Serinus® operating manual.

Although the name of the Met One instrument is different, the analyzer itself has remained unchanged and meets the strictest quality and performance requirements expected of Met One equipment. All the information presented in this manual is current, including analyzer specifications and operating principles.

Met One will update this manual to reflect the new branding convention in due course.

Table of Contents

Manufacturer's Statement 13
Notice 13
Safety Information 14
Important Safety Messages 15
Warranty 16
Service & Repairs 17
Product Compliance and Approvals 18
Manual Revision History 19

1. Introduction 21
1.1 Description 21
1.2 Specifications 21
1.2.1 Measurement 21
1.2.2 Precision/Accuracy 21
1.2.3 Calibration 22
1.2.4 Power 22
1.2.5 Operating Conditions 22
1.2.6 Communications 22
1.2.7 Physical Dimensions 23
1.2.8 Certifications 23
1.3 Nomenclature 24
1.4 Background/Theory 25
1.4.1 Measurement Theory 25
1.4.2 Kalman Filter Theory 27
1.5 Instrument Description 27
1.5.1 Calibration Valve Manifold 28
1.5.2 Auxiliary Valve Manifold 28
1.5.3 Delay Loop 28
1.5.4 Sample Filter Holder 28
1.5.5 Dryer 29
1.5.6 Ozone Generator 30
1.5.7 NO_2 to NO Converter 30
1.5.8 Measurement Cell 31
1.5.9 Pneumatic Tubing 33
1.5.10 Main Controller PCA 33
1.5.11 Rear Panel 34
1.5.12 Communications 35

2. Installation 37
2.1 Initial Check 37
2.2 Installation Notes 40
2.3 Instrument Set-Up 41
2.3.1 Power Connections 41
2.3.2 Pneumatic Connections 42
2.3.3 Communications Connections 45
2.3.4 Instrument Set-Up 46
2.4 U.S. EPA Reference Set-Up 47

2.5 EN Type Approval Set-up ... 48
2.6 Transporting/Storage ... 48

3. Operation ... 51

3.1 Warm-Up ... 51
3.2 Measurement ... 51
3.3 General Operation Information ... 52
3.3.1 Keypad & Display ... 52
3.3.2 Home Screen ... 54
3.4 Menus & Screens ... 56
3.4.1 Quick Menu ... 57
3.4.2 Main Menu ... 58
3.4.3 Analyser State Menu ... 59
3.4.4 Status Menu ... 60
3.4.5 Temperature Menu ... 62
3.4.6 Pressure & Flow Menu ... 63
3.4.7 Voltage Menu ... 63
3.4.8 General Settings Menu ... 64
3.4.9 Measurement Settings Menu ... 65
3.4.10 Calibration Menu ... 67
3.4.11 Pressure Calibration Menu ... 70
3.4.12 Service Menu ... 71
3.4.13 Diagnostics Menu ... 72
3.4.14 Digital Pots Menu ... 73
3.4.15 Internal Pump Menu (Option) ... 74
3.4.16 Valve Menu ... 75
3.4.17 Tests Menu ... 77
3.4.18 Digital Input Test Menu ... 77
3.4.19 Digital Output Test Menu ... 78
3.4.20 Calculation Factors Menu ... 78
3.4.21 Communications Menu ... 80
3.4.22 Data Logging Menu ... 81
3.4.23 Serial Communication Menu ... 82
3.4.24 Analog Input Menu ... 83
3.4.25 Analog Output Menu ... 84
3.4.26 Digital Input Menu ... 85
3.4.27 Digital Output Menu ... 86
3.4.28 Network Menu (Optional) ... 88
3.4.29 Bluetooth Menu ... 89
3.4.30 Trend Display Menu ... 90
3.4.31 Chart ... 91
3.4.32 Advanced Menu ... 93
3.4.33 Hardware Menu ... 94
3.4.34 Parameter Display Menu ... 95

4. Communications ... 97

4.1 RS232 Communication ... 97
4.2 USB Communication ... 98
4.3 TCP/IP Network Communication (Optional) ... 99
4.3.1 Reading Network Port Setup ... 100
4.3.2 Setting Network Port Setup ... 100

4.3.3 Port Forwarding on Remote Modem/Router Setup 101
4.3.4 Setup Airodis to Communicate with Serinus 101
4.4 Analog and Digital Communication 102
4.4.1 Analog Outputs 102
4.4.2 Analog Inputs 103
4.4.3 Digital Status Inputs 103
4.4.4 Digital Status Outputs 103
4.5 Logging Data 105
4.5.1 Configure Instrument Internal Logging 105
4.6 Using Airodis Software to Download Data 105
4.6.1 Connecting the Instrument to a PC 105
4.6.2 Installing Airodis 108
4.6.3 Configuring Airodis 109
4.7 Serinus Remote App/Bluetooth 114
4.7.1 Installation 115
4.7.2 Connecting to the Instrument 115
4.7.3 Instrument Control 116
4.7.4 Real-Time Plot 117
4.7.5 Download 118
4.7.6 Get Parameters 119
4.7.7 Preferences 120

5. Calibration 123

5.1 Overview 123
5.2 Pressure Calibration 125
5.2.1 Full Pressure Calibration (Two Point Calibration) 125
5.2.2 Pressure Calibration (Ambient Only) 127
5.2.3 Pressure Calibration (Internal Pump Option Only) 127
5.3 Zero Calibration 129
5.3.1 Calibration Port 129
5.3.2 Sample Port 129
5.3.3 Background Air Port 130
5.4 Span Calibration 130
5.4.1 Calibration Port with Multiple Gains Disabled 131
5.4.2 Sample Port with Multiple Gains Disabled 131
5.4.4 Sample Port with Multiple Gains Enabled 132
5.4.5 Manual Instrument Gain and Offset Adjustments 133
5.5 Precision Check 133
5.6 Multipoint Precision Check 134
5.7 NO_2 to NO Converter Efficiency 135
5.7.1 Single Point NO_2 to NO Converter Efficiency Check 136
5.7.2 Multipoint NO_2 to NO Converter Efficiency Adjustment 137
5.8 High Pressure Zero/Span Valve (Option) 138
5.8.1 Single Pressurised Calibration Option 138
5.8.2 Dual Pressurised Calibration Option 140

6. Service 143

6.1 Additional Safety Requirements for Service Personnel 143
6.2 Maintenance Tools 143
6.3 Maintenance Schedule 144

6.4 Maintenance Procedures ... 146
6.4.1 Particulate Filter Replacement ... 146
6.4.2 Clean Chassis Fan Filter ... 148
6.4.3 DFU Replacement ... 149
6.4.4 Leak Check ... 149
6.4.5 Clean Pneumatics ... 154
6.4.6 Replacing the PMT Desiccant Pack ... 154
6.4.7 Cleaning the Reaction Cell ... 155
6.4.8 Ozone Generator Maintenance ... 158
6.4.9 Pressure Sensor Check ... 161
6.5 Bootloader ... 163
6.5.1 Display Help Screen ... 163
6.5.2 Communications Port Test ... 163
6.5.3 Updating Firmware ... 164
6.5.4 Erase All Settings ... 164
6.5.5 Start Analyser ... 164

7. Troubleshooting ... 165
7.1 Flow Fault ... 168
7.2 Noisy/Unstable Readings ... 169
7.3 Converter Temperature Failure ... 170
7.4 Auxiliary Valve Manifold Temperature Failure ... 171
7.5 Reaction Cell Temperature Failure ... 172
7.6 USB Memory Stick Failure ... 173
7.7 Ecotech Service Support Files ... 174

8. Optional Extras ... 177
8.1 Dual Sample Filter (PN: E020100) ... 177
8.2 Test Lamp (PN: E020103) ... 178
8.3 Network Port (PN: E020101) ... 178
8.3.1 Hardware Setup ... 179
8.4 Sample Dryer (PN: E020118) ... 179
8.5 Rack Mount Kit (PN: E020116) ... 179
8.6 Internal Pump (PN: E020104) ... 183
8.6.1 Hardware Setup ... 183
8.6.2 Internal Pump Additional Components ... 183
8.6.3 Pressure Calibration Internal Pump Option ... 184
8.6.4 Leak Check Internal Pump Option ... 184
8.6.5 Pump Control ... 184
8.7 Metric Fittings Kit (PN: E020122) ... 184
8.8 High Pressure Zero/Span Valves ... 185
8.9 High Level Instrument (PN: E020113) ... 185
8.9.1 High Level Specifications ... 185
8.10 Internal Zero and Span (PN: E020134) ... 186
8.10.1 IZS Specifications ... 187
8.10.2 IZS Setup ... 189
8.10.3 IZS Transporting/Storage ... 190
8.10.4 IZS Calibration ... 191
8.10.5 IZS Service and Maintenance ... 192
8.11 Trace Level Instrument (PN: E020119) ... 194

8.11.1 Trace Specifications 194
8.11.2 Trace Setup 195
8.11.3 Trace Operation 196
8.11.4 Trace Default Values 196
8.11.5 Trace Calibration Guidelines 197
8.11.6 Trace Service and Maintenance 198

9. Parts List and Schematics 199

9.1 Serinus Accessories Kit 199
9.2 Maintenance Kit 199
9.3 Consumables 200
9.4 Instrument Parts List 201
9.4.1 Optional Extras Spare Part List 205
9.5 Plumbing Schematic – (PN: D020002) 208
9.6 Internal Pump Plumbing Schematic – (PN: D020063) 210
9.7 High Level Plumbing Schematic – (PN: D020024) 212
9.8 Trace Level Plumbing Schematic – (PN: D020065) 214
9.9 Sample Dryer Plumbing Schematic – (PN: D020064) 216
9.10 IZS Plumbing Schematic – (PN: D020052) 218
9.11 Block Wiring Schematic – (PN: D020103-01) 220
9.12 IZS Block Wiring Schematic – (PN: D020122-01) 221
9.13 Measurement Cell and Reaction Cell Exploded View – (PN: H011200) 222
9.14 Auxiliary Valve Manifold Assembly Exploded View – (PN: H011300) 223
9.15 Calibration Valve Manifold Assembly Exploded View – (PN: H010013-01) 224
9.16 Ozone Generator Assembly Exploded View – (PN: H011107) 225
9.17 IZS Calibration Valve Manifold Assembly Exploded View – (PN: H010056) 226
9.18 Permeation Oven Assembly Exploded View – (PN: H012170) 227
9.19 Valve Assembly Exploded View – (PN: H010042) 228
9.20 Sample Filter Holder Assembly – (PN: H010160) 229
9.21 High Pressure Valve Exploded View – (PN: H050043) 230
9.22 NO_x Converter Assembly – (PN: H011105) 231
9.23 Internal Pump Assembly – (PN: H011140) 232
9.24 Dryer Assembly – (PN: H011106) 233
9.25 Flow Block Assembly – (PN: H013165) 234

List of Figures

Figure 1 – Simple Pneumatic Diagram 26
Figure 2 – Major Components of Serinus 40 27
Figure 3 – Calibration Valve Manifold 28
Figure 4 – Auxiliary Valve Manifold 28
Figure 5 – Sample Filter Holder 29
Figure 6 – Dryer 29
Figure 7 – Ozone Generator 30
Figure 8 – NO_2 to NO Converter 30
Figure 9 – Measurement Cell 31
Figure 10 – PMT Assembly 31
Figure 11 – Reaction Cell 32
Figure 12 – Optical Bandpass Filter 32
Figure 13 – Pressure Sensor PCA 33
Figure 14 – Ecotech Tubing 33
Figure 15 – Rear Panel 34
Figure 16 – Power ON/OFF Switch 35
Figure 17 – Communication Connections 35
Figure 18 – Received Item 38
Figure 19 – Opening the Instrument – 1 39
Figure 20 – Opening the Instrument – 2 39
Figure 21 – Opening the Instrument – 3 39
Figure 22 – Opening the Instrument – 4 40
Figure 23 – Instrument Rear Panel 41
Figure 24 – Connect Power Cord 42
Figure 25 – Turn ON Power Switch 42
Figure 26 – Dust Plugs 43
Figure 27 – Remove Nut 43
Figure 28 – Ferrules Correct Orientation 43
Figure 29 – Replace Nut Loosely 44
Figure 30 – Insert Tube 44
Figure 31 – Tighten Nut 44
Figure 32 – Installation of USB Memory Stick 46
Figure 33 – Switching the Battery ON/OFF 46
Figure 34 – Dust Plugs 49
Figure 35 – Packing Instruction 50
Figure 36 – Front Panel 52
Figure 37 – Home Screen 54
Figure 38 – Quick Menu Screen 57
Figure 39 – Main Menu Screen 58
Figure 40 – Analyser State Menu Screen 59
Figure 41 – Status Menu Screen 60
Figure 42 – Temperature Menu Screen 62
Figure 43 – Pressure & Flow Menu Screen 63
Figure 44 – Voltage Menu Screen 63
Figure 45 – General Settings Menu Screen 64
Figure 46 – Measurement Settings Menu Screen 65
Figure 47 – Calibration Menu Screen 67
Figure 48 – Pressure Calibration Menu Screen 70
Figure 49 – Service Menu Screen 71
Figure 50 – Diagnostics Menu Screen 72

Figure 51 – Digital Pots Menu Screen 73
Figure 52 – Internal Pump Menu Screen 74
Figure 53 – Valve Menu Screen 75
Figure 54 – Tests Menu Screen 77
Figure 55 – Digital Input Test Menu Screen 77
Figure 56 – Digital Output Test Menu Screen 78
Figure 57 – Calculation Factors Menu Screen 78
Figure 58 – Communications Menu Screen 80
Figure 59 – Data Logging Menu Screen 81
Figure 60 – Serial Communication Menu Screen 82
Figure 61 – Analog Input Menu Screen 83
Figure 62 – Analog Output Menu Screen 84
Figure 63 – Digital Input Menu Screen 85
Figure 64 – Digital Output Menu Screen 86
Figure 65 – Network Menu Screen 88
Figure 66 – Bluetooth Menu Screen 89
Figure 67 – Trend Display Menu Screen 90
Figure 68 – Chart Screen 91
Figure 69 – Advanced Menu Screen 93
Figure 70 – Hardware Menu Screen 94
Figure 71 – Parameter Display Menu Screen 95
Figure 72 – Communication Ports 97
Figure 73 – Multidrop RS232 Cable Example 98
Figure 74 – Example of Typical Network Setups 99
Figure 75 – Example of Network Menu Setup 100
Figure 76 – Port Forwarding Example 101
Figure 77 – LAN Network Set-Up (Airodis) 101
Figure 78 – WAN Network Set-Up (Airodis) 102
Figure 79 – Rear Panel PCA (Default Jumpers Highlighted) 104
Figure 80 – Analog & Digital I/O Individual Pin Descriptions 104
Figure 81 – Installing Driver Software (Device Manager) 106
Figure 82 – Update Driver Popup 106
Figure 83 – Update Driver Popup (Directory Location) 107
Figure 84 – Installing Driver Confirmation Prompt 107
Figure 85 – Successful Driver Installation 108
Figure 86 – Airodis Workspace Manager 109
Figure 87 – Adding a New Station 109
Figure 88 – New Station Connection 110
Figure 89 – Station Configuration (Channel List) 111
Figure 90 – Error Status Notification 111
Figure 91 – Downloading Data 112
Figure 92 – Download Data Status 112
Figure 93 – Data Visibility 113
Figure 94 – Exporting Data 113
Figure 95 – Data Download Complete 114
Figure 96 – Downloading the App from Google Play Store 115
Figure 97 – Bluetooth Pairing Request 115
Figure 98 – Showing or Hiding the NumPad 116
Figure 99 – Switching Analysers 117
Figure 100 – Real-Time Plot 118
Figure 101 – Plot of Downloaded Data 119
Figure 102 – Directory Settings 120

Figure 103 – Logs Format 120
Figure 104 – Colour Theme Settings 121
Figure 105 – Example of a Calibration System 123
Figure 106 – Full Pressure Calibration Set-up 126
Figure 107 – Full Pressure Calibration Set-up (Ambient) 126
Figure 108 – Ambient Pressure Calibration Set-up 127
Figure 109 – Pressure Calibration (Internal Pump Option Only) Set-up 128
Figure 110 – Multipoint Calibration Results Example 135
Figure 111 – Single High Pressure Calibration Option 138
Figure 112 – Dual High Pressure Calibration Option 140
Figure 113 – Minifit Extraction Tool – (PN: T030001) 143
Figure 114 – Orifice/Sintered Filter Removal Tool – (PN: H010046) 144
Figure 115 – Leak Test Jig – (PN: H050069) 144
Figure 116 – Air Monitoring Test Equipment Kit (AMTEK) – Customisable 144
Figure 117 – Remove Compression Nut 146
Figure 118 – Remove Retaining Ring 146
Figure 119 – Remove Filter Sealing Cap 147
Figure 120 – Particulate Filter 147
Figure 121 – Avoid to Touching Particulate Filter Paper 148
Figure 122 – Compression Fitting Elbow Direction 148
Figure 123 – Remove Filter Casing and Filter 149
Figure 124 – DFU Filter 149
Figure 125 – Leak Test Jig on Exhaust Port 150
Figure 126 – Connect Vacuum Source 150
Figure 127 – Stop Valve (Bypass Pump) 152
Figure 128 – Stop Valve (Sample Pump) 153
Figure 129 – Removing the Desiccant Pack 155
Figure 130 – Electrical Tape 156
Figure 131 – Remove Reaction Cell 156
Figure 132 – Cover the PMT Window 157
Figure 133 – Place the Black Electrical Tape 157
Figure 134 – Optical Bandpass Filter Removal and Cleaning 157
Figure 135 – Replace Reaction Cell 158
Figure 136 – Remove Ozone Generator from Instrument 159
Figure 137 – Remove the Screw 159
Figure 138 – Remove the Screw 160
Figure 139 – Remove White Tube Block Fastener 160
Figure 140 – Disassemble Glass Tube 161
Figure 141 – Test Point Location 162
Figure 142 – Typical Test Point Reading of Cell Pressure with Vacuum Connected to Exhaust Port 162
Figure 143 – Typical Test Point Reading of Manifold Pressure Sensor 163
Figure 144 – Flow Fault Diagnostic Procedure 168
Figure 145 – Noisy or Unstable Readings Troubleshooting Flow Chart 169
Figure 146 – Converter Alarm Troubleshooting Flow Chart 170
Figure 147 – Valve Manifold Temperature Alarm Troubleshooting Flow Chart 171
Figure 148 – Reaction Cell Temperature Failure Troubleshooting Flow Chart 172
Figure 149 – USB Memory Stick Failure 173
Figure 150 – USB Memory Stick File Structure 174
Figure 151 – Dual Filter Option Installed 177
Figure 152 – Separate Rack Slides 180
Figure 153 – Assemble Inner Slide on Chassis 180
Figure 154 – Rack Mount Ears Fitted to Instrument 181

Figure 155 – Attach Rack Mount Adaptors to Outer Slides 181
Figure 156 – Test Fit the Rack Slide Assembly into Your Rack 182
Figure 157 – Attach Slides to Front of Rack 182
Figure 158 – Slide Clips 183
Figure 159 – IZS Specific Internal Components Diagram 187
Figure 160 – Typical Permeation Tube and Chamber Dimensions (Units in mm) 188
Figure 161 – Permeation Tube Removal 190

List of Tables

Table 1 – Internationally Recognised Symbols 14
Table 2 – Manual Revision History 19
Table 3 – List of Items Received 37
Table 4 – Measurements Times 51
Table 5 – Front Panel Buttons Function 53
Table 6 – Digital Output States 87
Table 7 – New Station Setup 110
Table 8 – Maintenance Schedule 145
Table 9 – Troubleshoot List 165
Table 10 –Dual Sample Filter Parts Added 177
Table 11 –Test Lamp Parts Added 178
Table 12 – Test Lamp Parts Removed 178
Table 13 – Network Port Parts Added 178
Table 14 – Network Port Parts Removed 178
Table 15 – Sample Dryer Parts Added 179
Table 16 –Rack Mount Kit Parts Added 179
Table 17 – Internal Pump Additional Components 183
Table 18 – High Level Instrument Parts Added 185
Table 19 – High Level Instrument Parts Removed 185
Table 20 – IZS Parts Removed 187
Table 21 – IZS Parts Added 187
Table 22 – IZS Annual Maintenance Kit – (PN: E020212) 192
Table 23 – Trace Parts Removed 194
Table 24 – Trace Parts Added 195
Table 25 – Trace Parameter Value Changes 197
Table 26 – Maintenance Schedule 198
Table 27 – Serinus Accessories Kit – (PN: H010136) 199
Table 28 – Annual Maintenance Kit – (PN: E020203-01) 199
Table 29 – Consumables 200
Table 30 – Spare Parts List (Main Components) 201
Table 31 – Spare Parts List (Cables) 203
Table 32 – Spare Parts List (O-rings) 203
Table 33 – Spare Parts List (Fittings) 203
Table 34 – Spare Parts List (Miscellaneous) 204
Table 35 – Spare Parts List (Shipping) 205
Table 36 – Spare Part List (Test Lamp) 205
Table 37 – Spare Part List (Sample Dryer) 206
Table 38 – Spare Part List (Internal Pump) 206
Table 39 – Spare Part List (Metric Fittings Kit) 206
Table 40 – Spare Part List (High Pressure Zero/Span Valves) 206

Table 41 – Spare Part List (High Level Instrument) 207
Table 42 – Spare Part List (IZS) 207
Table 43 – Spare Part List (Trace Level Instrument) 207
Table 44 – Packet Format 235
Table 45 – Example: Primary Gas Request 235
Table 46 – Example: Primary Gas Response 236
Table 47 – Example: Primary Gas Response (Continued) 236
Table 48 – List of Errors 236
Table 49 – Example: Get IEEE Response data 237
Table 50 – Advanced Protocol Parameter List 238
Table 51 – Bayern-Hessen Data 251
Table 52 – Block Check Operation 252
Table 53 – Status Bit Map 253
Table 54 – Failure Bit Map (Positive Logic) 253
Table 55 – Modbus Error Codes 257

List of Appendices

Appendix A. Advanced Protocol 235
A.1 Command Format 235
A.2 Commands 236
A.3 List of Parameters 238
Appendix B. EC9800 Protocol 249
B.1 Command Format 249
B.2 Commands 249
Appendix C. Bayern-Hessen Protocol 251
C.1 Command Format 251
C.2 Commands 252
Appendix D. ModBus Protocol 255
D.1 Command Format 255
D.2 Commands 255

Manufacturer's Statement

Thank you for selecting the Ecotech Serinus® 40 Oxides of Nitrogen Analyser.

The Serinus series is the next generation of Ecotech designed and manufactured gas analysers. The Serinus 40 will perform NO, NO_2 and NO_X measurements over a range of 0 - 20 ppm with a lower detectable limit of 0.4 ppb.

This User Manual provides a complete product description including operating instructions, calibration and maintenance requirements for the Serinus® 40 Oxides of Nitrogen Analyser.

Reference should also be made to the relevant local standards which should be used in conjunction with this manual. Some of these standards are listed in this manual.

If, after reading this manual you have any questions or you are still unsure or unclear on any part of the Serinus® 40, please do not hesitate to contact Ecotech or your local Ecotech distributor.

Please help the environment and recycle the pages of this manual when you have finished using it.

Notice

The information contained in this manual is subject to change without notice. Ecotech reserves the right to make changes to equipment construction, design, specifications and /or procedures without notification.

Copyright © 2021. All rights reserved. Reproduction of this manual, in any form, is prohibited without the written consent of Ecotech Pty Ltd.

Safety Information

Read all the safety information in this section prior to using the equipment. To reduce the risk of personal injury caused by potential hazards, follow all safety notices and warnings in this documentation.

The following internationally recognised symbols are used on Ecotech equipment:

Table 1 – Internationally Recognised Symbols

	Protective conductor terminal	IEC 60417-5019
	Alternating current	IEC 60417-5032
	Caution, hot surface	IEC 60417-5041
	Caution, risk of danger to user and/or equipment Refer to any accompanying documents	ISO 7000-0434
	Caution, risk of electric shock	ISO 3864-5036

These symbols will also be found throughout this manual to indicate relevant safety messages.

Note: Notes are used throughout this manual to indicate additional information regarding a particular part or process.

If the equipment is used for purposes not specified by Ecotech, the protection provided by this equipment may be impaired.

Important Safety Messages

	Disconnect Power Prior to Service Hazardous voltages exist within the instrument. Do not remove or modify any of the internal components or electrical connections whilst the mains power is ON. Always unplug the equipment prior to removing or replacing any components.
	Replacing Parts Replacement of any part should only be carried out by qualified personnel, using only parts specified by Ecotech, as these parts meet stringent Ecotech quality.
	Mains Supply Cord Do not replace the detachable mains supply cord with an inadequately rated cord. Any mains supply cord that is used with the instrument must comply with the safety requirements (250 V/10 A minimum requirement). A mains power cord with a protective earth conductor must be used. Ensure that the mains supply cord is maintained in a safe working condition.
	Do Not Expose Equipment to Flammable Gases This equipment is not intended for use in explosive environments, or conditions where flammable gases are present. The user should not expose the equipment to these conditions. Do not introduce any flammable gases into the instrument, otherwise serious accidents such as explosion or fire may result.
	Electromagnetic Compliance The instrument lid should be closed when in normal operation, to comply with EMC regulations.
	Means of Lifting/Carrying Instrument This instrument is a heavy and bulky object. Two persons should lift/carry the object, otherwise use proper lifting equipment. Proper lifting techniques should be used when moving the instrument.
	Internal Components Do not insert a rod or finger into the cooling fans, otherwise injury may result. Do not energise the instrument until all conductive cleaning liquids, used on internal components, are dried up.

Warranty

This product has been manufactured in an ISO 9001 facility with care and attention to quality.

The product is subject to a 24-month warranty on parts and labour from date of shipment. The warranty period commences when the product is shipped from the factory. Lamps, filters and other consumable items are not covered by this warranty.

Each instrument is subjected to a vigorous testing procedure prior to despatch and will be accompanied with a parameter list and a multipoint precision check, thereby enabling the instrument to be installed and ready for use without any further testing.

Service & Repairs

Our qualified and experienced technicians are available to provide fast and friendly service between the hours of 8:30 am – 5:00 pm AEST Monday to Friday. Please contact either your local distributor or Ecotech regarding any questions you have about your instrument.

Service Guidelines

This manual is designed to provide the necessary information for the setup, operation, testing, maintenance and troubleshooting of your instrument.

Should you still require support after consulting the documentation, we encourage you to contact your local distributor for support.

To contact Ecotech directly, please e-mail our Technical Support Services group at support@ecotech.com or to speak with someone directly:

Please dial 1300 364 946 if calling from within Australia.

Please dial +61 3 9730 7800 if calling from outside of Australia.

Please contact Ecotech and obtain a Return Material Authorisation (RMA) number before sending any equipment back to the factory. This allows us to track and schedule service work and to expedite customer service. Please include this RMA number when you return equipment, preferably both inside and outside the shipping packaging. This will ensure you receive prompt service.

When shipping instrumentation, please also include the following information:

- Name and phone number
- Company name
- Shipping address
- Quantity of items being returned
- Model number/s or a description of each item
- Serial number/s of each item (if applicable)
- A description of the problem and any fault-finding completed
- Original sales order or invoice number related to the equipment

Shipping Address:

Attention Service Department

Ecotech Pty Ltd

1492 Ferntree Gully Road,

Knoxfield, VIC, Australia 3180.

Product Compliance and Approvals

The Serinus® 40 Oxides of Nitrogen Analyser, as manufactured by Ecotech Pty Ltd, complies with the essential requirements of the directives listed below (including CE compliance). The respective standards have been applied:

Low Voltage Directive (LVD) Directive 2014/35/EU

EN 61010-1:2010	Safety requirements for electrical equipment, for measurement, control and laboratory use – General requirements

Electromagnetic Compatibility (EMC) Directive 2014/30/EU

EN 61326-1:2013	Electrical equipment for measurement, control and laboratory use – EMC requirements – General requirements

Radio Equipment Directive (RED) 2014/53/EU

EN 300 328 V2.1.1	Wideband transmission systems – Data transmission equipment operating in the 2.4 GHz ISM band and using wide band modulation techniques

Regulatory Compliance Mark (RCM) – Australia

AS/NZS 4268:2017	Radio equipment and systems – Short range devices – Limits and methods of measurement
ARPANSA Radiation Protection Standard	Maximum Exposure Levels to Radiofrequency Fields – 3 kHz - 300 GHz – Radiation Protection Series Publication No. 3: 2002

This analyser is also certified to a number of measurement standards – refer to Section 1.2.8

Manual Revision History

Manual PN: M010028

Current revision: 3.5

Date released: 2 December 2021

Description: User Manual for the Serinus® 40 Oxides of Nitrogen Analyser

This manual is the full user manual for the Serinus® 40 Oxides of Nitrogen Analyser. This manual contains all relevant information on theory, specifications, installation, operation, maintenance and calibration. Any information that cannot be found within this manual can be obtained by contacting Ecotech.

This manual uses cross reference links extensively throughout this manual. The hot keys below will greatly reduce the amount of time scrolling between references:

- You can access the links by pressing the following:
  - > CTRL + LEFT MOUSE CLICK: Move to the link location
- You can switch between links by pressing the following:
  - > ALT + LEFT ARROW KEY: Returns you to previous Link
  - > ALT + RIGHT ARROW KEY: Swaps back

Table 2 – Manual Revision History

Edition	Date	Summary
1.0	September 2008	Initial release
1.1	February 2009	General updates, specifications and menu updates
1.2	March 2009	New maintenance procedures Updated analyser setup Small corrections New menu items added
1.3	June 2009	Small correction Section 4.5 and 4.6 swapped Updated exhaust description
1.4	November 2009	Small correction Included Serinus downloader info Included advanced protocol
1.5	February 2010	Minor changes section Updated parts list
1.6	September 2010	CE conformity added Pressurised span/zero added Updates to rack mount option Updates to Serinus downloader Update to 25 pin I/O network communications

1.7	January 2011	High level option added Updates to power specifications/battery Updates to serial communications Updated maintenance kit
1.8	September 2011	Analog inputs Network adapter menu General overhaul of manual drawings, pictures and content
2.0	July 2012	New chassis Update menu system Add Bluetooth menu Serinus remote Android app Rack mount procedure update Analog output calibration
2.1	March 2013	General overhaul of manual drawings, pictures and content. Format updated
2.2	October 2013	Reformatting of manual with some small technical changes
2.2	November 2013	Addition of Airodis installation steps
2.3	April 2014	Auto-Ranging Power Supply Added Main Controller and Rear Panel PCAs changed.
3.0	December 2014	Several drawings added. Manual changed to new V3 standard.
3.1	December 2015	Added IZS option and relevant content sections and several drawings
3.2	March 2016	Added the Trace option and relevant content sections and several drawings
3.3	June 2018	Safety Information updated Product Compliance & Approvals update
3.4	December 2018	Calibration of Instrument in Multiple Gain added.
3.5	December 2021	Manual update to firmware 4.12.0 Rev. Q board. A number of changes to descriptions, procedures and menu items. Added the internal pump menu items, procedures, and drawings. Standardization of naming convection applied.

1. Introduction

1.1 Description

The Serinus 40 Oxides of Nitrogen Analyser uses gas phase chemiluminescence detection to perform continuous analysis of nitric oxide (NO), total oxides of nitrogen (NO_X) and nitrogen dioxide (NO_2) with a range of 0 - 20 ppm.

The U.S. EPA has designated the Serinus 40 Oxides of Nitrogen Analyser as a reference method and TÜV has designated it as an EN approved instrument.

This section will describe the specifications of the instrument as well as the main components and techniques used to obtain stable gas concentration readings.

1.2 Specifications

1.2.1 Measurement

Range

0 - 20 ppm (autoranging)

U.S. EPA designated range: 0 - 0.5 ppm

TÜV EN certification ranges: NO (0 - 1,000 ppb) NO_2 (0 - 260 ppb)

Lower Detectable Limit

< 0.4 ppb, with Kalman filter active

1.2.2 Precision/Accuracy

Precision

0.4 ppb otherwise 0.5% of reading, whichever is greater

Linearity

± 1% of full scale

Noise at Zero

Zero noise < 0.2 ppb

Response Time

15 seconds to 95%

Sample Flow Rate

0.3 slpm (0.6 slpm total flow for the NO and NO_X flow path)

1.2.3 Calibration

Zero Drift

Temperature dependant:	0.1 ppb per °C
24 hours:	< 0.5 ppb
7 days:	< 0.5 ppb

Span Drift

Temperature dependant:	0.1% per °C
7 days:	< 1.0% of reading or 0.5 ppb whichever is greater

1.2.4 Power

Operating Voltage

100 - 240 VAC (± 10%)

50 - 60 Hz

Overvoltage Category II

Power Consumption

285 VA (max at start-up)

190 VA (nominal)

1.2.5 Operating Conditions

Ambient Temperature	0 - 40 °C (32 - 104 °F)
Relative Humidity	10 - 80% (non-condensing)
Pollution Degree	2
Sample Pressure Dependence	5% change in pressure produces less than a 1% change in reading
Maximum Altitude[1]:	2000 m above sea level

1.2.6 Communications

Analog Output

Three menu selectable current or voltage analog outputs:

[1] For higher altitude contact Ecotech for support/assistance.

- Current output of 0 - 20 mA, 2 - 20 mA or 4 - 20 mA.
- Voltage output of 0 - 5 V, with menu selectable zero offset of 0 V, 0.25 V or 0.5 V.
- Voltage output of 0 - 10 V (configured using jumpers (JP3) on rear panel PCA).
- Range: User scalable min and max range for analog output to suit application.

Analog Input

- Three analog voltage inputs (0 - 5 VDC) CAT I rated.

Digital Output

- RS232 port #1: Normal digital communication.
- RS232 port #2: Multidrop port used for multiple instrument connections on a single RS232.
- USB port connection on rear panel.
- USB memory stick (front panel) for data logging, event logging, parameter and configuration storage.
- TCP/IP port (optional)
- 25 pin connector with discrete status and user control:
  - Eight Digital Outputs, open collector max 400 mA each @ 12 VDC (max total output 2 A).
  - Eight Digital Inputs, 0 - 5 VDC, CAT I rated.

1.2.7 Physical Dimensions

Case Dimensions

Rack length (front to rear):	622 mm (24.5”)
Total length (with latch release):	662 mm (26.1”)
Chassis width:	418 mm (16.5”)
Front panel width:	429 mm (16.9”)
Chassis height:	163 mm/Uses 4 RU (6.4”)
Front panel height:	185 mm (7.3”)
Weight:	23.7 kg

1.2.8 Certifications

- U.S. EPA Approval (RFNA–0809–186)
- EN Approval TÜV (0000040204-02)
- EN Approval MCERTS (MC100167/07)
- Australian Standard (AS 3580.5.1-2011)
- Russian Approval (56263-14)
- French Approval LSCQA
- Ukraine Approval (12/3/B/24/295-17)

- Chinese Pattern Approval (JJF1361-2012)

1.3 Nomenclature

NO	This is the abbreviation of nitrogen oxide or nitric oxide.
NO_2	This is the abbreviation of nitrogen dioxide.
NO_X	A generic term for mono-nitrogen oxides NO and NO_2.
Span	A gas sample of known composition and concentration used to calibrate/check the response of the instrument.
Zero	Zero calibration uses zero air (NO_X scrubbed ambient air) to calibrate/check the zero response of the instrument.
Background	Removes unwanted signal from the measurement signal. This is accomplished by pre-reacting the sample gas with Ozone outside the measurement cell. The pre-reacted gas is drawn into the reaction cell where this signal is stored as the background signal. This background measurement is used to correct the sample measurement by subtracting the background signal from the measurement signal. Background cycle can be described as a dynamic zero where unwanted signals generated from the photomultiplier tube (detector) due to internal offsets (dark current) or unwanted cell luminescence's are removed.
Multipoint Precision Check	A procedure to verify the linearity of the response of the instrument.
Calibration	The process of adjusting the instrument to ensure that it is measuring the correct concentration.
GPT	Gas Phase Titration. The method used to generate NO_2 by mixing O3 and NO for calibration and converter efficiency tests.
Zero Drift	The change in the instrument's response to zero air over a period of continuous unadjusted operation.
Zero Air	Is purified air in which the concentration of NO is < 0.5 ppb and NO_2 is < 0.5 ppb with water vapour of less than 10% RH. Sufficient purified air can be obtained by passing dry ambient air through an activated charcoal filter, a Purafil cartridge and a particulate filter.
External Span Source	Span gas that is delivered via an external accredited cylinder containing NO in balance with N2 (e.g. NATA/NIST).
Sample Air	Sample air is defined as the sample before it has entered the reaction cell, as distinguished from the exhaust air.
Exhaust Air	Exhaust air is the sample air after it has passed through the reaction/measurement/detection cell and is moving towards being expelled from the instrument.
ID and OD	These are measurements of tubing; ID is the internal diameter of tubing and OD is the outer diameter.
Multidrop	A configuration of multiple instruments connected via the same RS232 cable.
Photomultiplier Tube	A highly sensitive device which can detect extremely low levels of light (photons) and multiply the electrical signal to a point where it can be accurately measured. This is often referred to as a PMT.

Bootloader	A program that checks whether the current firmware is valid, executes the instrument start-up. The bootloader can be entered by pressing the '+' key on the front keypad during the first ½ second after power ON and following the prompts. The bootloader enables various low level recovery tools, including updating the firmware from a USB memory stick.
PCA	Printed Circuit Assembly. An electronic circuit mounted on a printed circuit board to perform a specific electronic function.
Slpm	Standard litres per minute. This is the flow referenced to standard temperature and pressure conditions. For the purposes of this manual, all flows are referenced to 0 °C and 101.3 kpa (1 atm).
Permeation Tube	A Permeation tube is a device filled with a chemical compound stored in an inert material (normally a tube) that is used in the permeation oven to produce a known gas concentration. When the permeation oven temperature is stable, the device emits the compound through its permeable portion at a constant rate.
Permeation Oven	This assembly uses a digital temperature controller from the Main controller PCA to maintain the permeation chamber temperature at a set point with high accuracy.
Permeation Chamber	Houses the permeation tube within the permeation oven.

1.4 Background/Theory

Nitric oxide (NO) is a colourless, odourless gas. Nitrogen dioxide (NO_2) is a brownish gas with a pungent odour. In the atmosphere, NO_2 and NO exist in equilibrium and the mixture is commonly referred to as nitrogen oxides, or NO_X.

Oxides of Nitrogen (NO_X) are typically the product of high temperature combustion processes, such as motor vehicle engines, industrial boilers in power stations and other industry, by oxidation of atmospheric nitrogen (N_2). In urban areas, motor vehicles and gas heater emissions are a major source of NO_X. In rural areas, livestock, fertilizers and other processes can also produce NO_X.

1.4.1 Measurement Theory

The instrument uses gas-phase chemiluminescence detection to perform continuous analysis of nitric oxide (NO), total oxides of nitrogen (NO_X), and nitrogen dioxide (NO_2). This is achieved by using one primary reaction cell and drawing the sample through two separate paths controlled by the main controller PCA. The instrument consists of a pneumatic system, an NO_2 to NO converter, a reaction cell, a measurement cell (PMT), an Ozone generator and a main controller PCA.

The analysis of nitrogen oxides by chemiluminescence is based on the luminescence from an activated molecular NO_2 species produced by the reaction between NO and O_3 in an evacuated chamber. The NO molecules react with Ozone to form the activated species NO_2* according to the reaction mechanism:

$$NO + O_3 \rightarrow NO_2^* + O_2$$

Equation 1 – Chemiluminescence Reaction for NO

As the activated species NO_2* reverts to a lower energy state, it emits broad-band radiation from 500 - 3000 nm, with a maximum intensity at approximately 1100 nm. Since one NO molecule is required to form one NO_2* molecule, the intensity of the Chemiluminescent reaction is directly proportional to the NO concentration within the sample. The PMT current is then directly proportional to the chemiluminescence intensity.

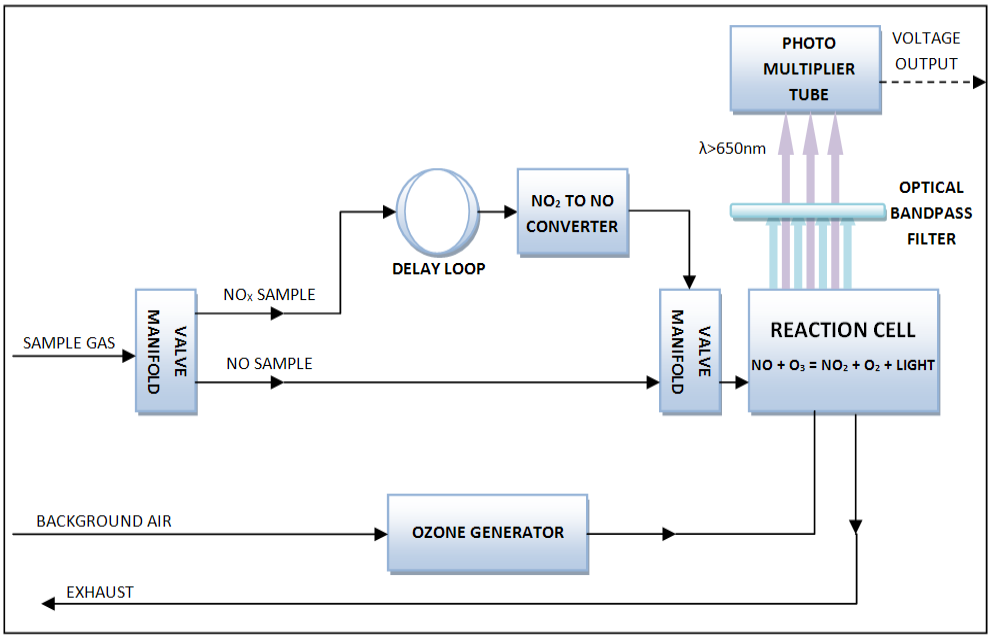

Figure 1 – Simple Pneumatic Diagram

Sample air enters the reaction cell via two separate (alternating) paths; the NO path and NO_X path. There is a tee intersection where the sample is split up and drawn into each path. The NO_X path has an increased residence time (delay loop and NO_2 to NO converter). This enables the measurement system to analyse the same parcel of sample for each path.

Any NO present in the sample, when drawn through the NO path, reacts with Ozone in the reaction cell resulting in the NO measurement.

Any NO or NO_2 present in the sample when drawn through the NO_X path, first passes through the NO_2 to NO converter. This process allows the NO to pass through unaffected but converts any NO_2 in the sample into NO. Thus the total NO (NO + converted NO_2) in the NO_X path reacts with Ozone in the reaction cell resulting in the NO_X measurement.

In the reaction cell energy is released in the form of chemiluminescent radiation, which is filtered by an optical bandpass filter and detected by the photomultiplier tube (PMT). The level of chemiluminescence detected is directly proportionally to the concentration of NO in the sample.

Equation 2 – NO_2 Calculation

The concentration of NO_2 is calculated by subtracting the NO measurement from NO_X measurement.

$NO_X = NO + NO_2$

Or

$NO_2 = NO_X - NO$

1.4.2 Kalman Filter Theory

The digital Kalman filter provides an ideal compromise between response time and noise reduction for the type of signal and noise present in ambient air analysers.

The Kalman filter enhances measurements by modifying the filter time base variable, depending on the change rate of the measured value. If the signal is changing rapidly, the instrument is allowed to respond quickly. When the signal is steady, a long integration time is used to reduce noise. The system continuously analyses the signal and uses the appropriate filtering time.

1.5 Instrument Description

The major components of the Serinus 40 are described below:

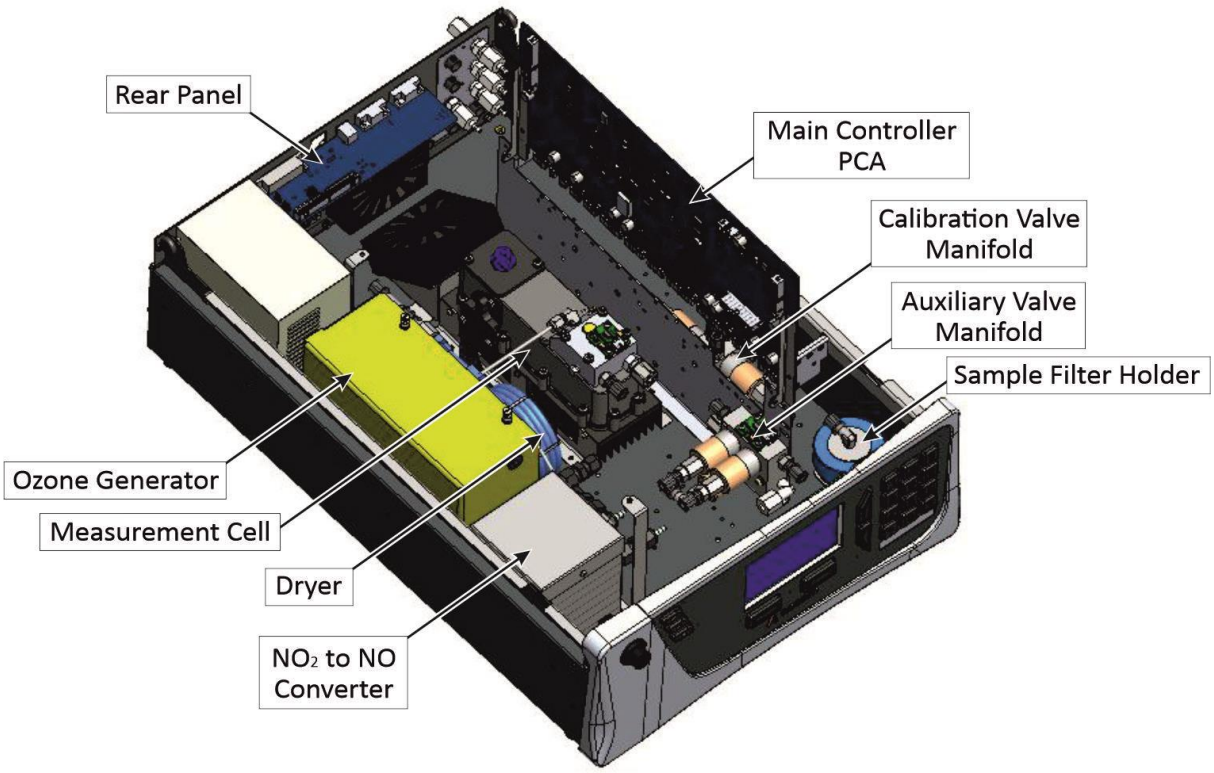

Figure 2 – Major Components of Serinus 40

1.5.1 Calibration Valve Manifold

Refer to Figure 2 for the location of calibration valve manifold. The calibration valve manifold switches between sample, calibration and internal zero.

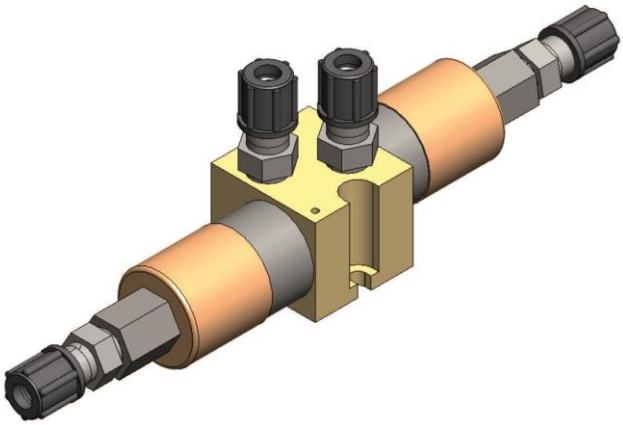

Figure 3 – Calibration Valve Manifold

1.5.2 Auxiliary Valve Manifold

Refer to Figure 2 for the location of auxiliary valve manifold. The auxiliary valve manifold switches sample gas between NO and NO_X paths along with background and bypass flow.

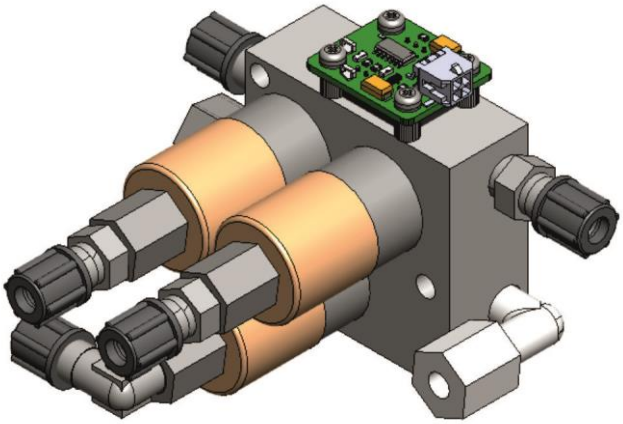

Figure 4 – Auxiliary Valve Manifold

1.5.3 Delay Loop

In order to measure the NO and NO_X sample at the same point in time within the reaction cell, a single sample is split into two paths: NO and NO_X. Each sample path is measured sequentially. The delay loop is installed in the NO_X path and along with the restriction of the NO_2 to NO converter is used to extend the time the sample takes to reach the reaction cell. Tubing lengths in specific areas of the instrument are critical and must not be changed. Changing these lengths will affect the timing of the sample paths.

1.5.4 Sample Filter Holder

Refer to Figure 2 for the location of sample filter holder. Within the sample filter holder is a particulate filter. The particulate filter is a Teflon 5-micron (µm) filter with a diameter of 47 mm. This filter prevents

all particles larger than 5 µm from entering the measurement system that could interfere with sample measurement.

Note: The 5-micron filter element should be replaced on a regular basis.

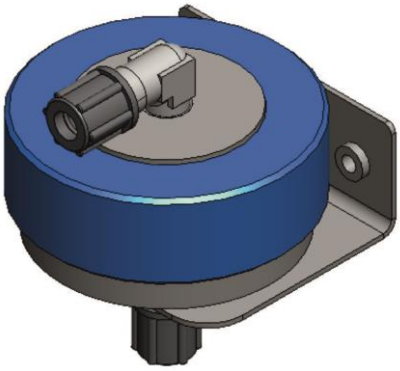

Figure 5 – Sample Filter Holder

1.5.5 Dryer

Refer to Figure 2 for the location of dryer. The dryer is constructed of Nafion tubing and is designed to remove water vapour from ambient air that is used by the Ozone generator. The water is absorbed and moves through the walls of the tubing, evaporating into the surrounding air. The remaining gas is unaffected. The flow control is performed by utilising a critical orifice.

Orifice

The critical orifice is made of a high precision stainless steel and sapphire. The critical orifice is a simple device that operates at a set temperature and requires minimal maintenance, it will passively keep the volume flow rate constant at a known value.

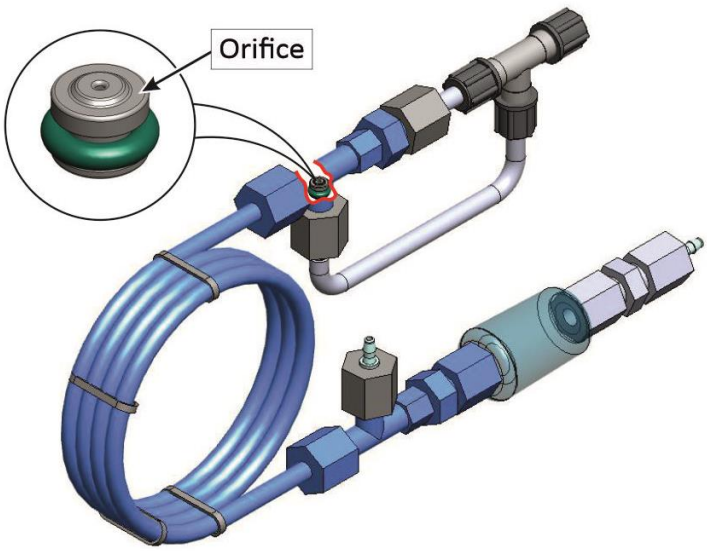

Figure 6 – Dryer

1.5.6 Ozone Generator

Refer to Figure 2 for the location of Ozone generator. The Ozone generator is a corona discharge Ozone source driven by an ignition coil. Dry air is drawn into the discharge tube via an orifice and ionised by a high voltage electrode. This yields O_3 from the reaction 3O2 → 2O3. The ionisation takes place in the confines of a glass tube with the electrode mounted on the outside. The amount of Ozone generated is controlled by varying the energy to the discharge tube. The Ozone flow rate is 80 sccm with an Ozone concentration of 6000 - 8000 ppm (approximately).

Figure 7 – Ozone Generator

1.5.7 NO_2 to NO Converter

Refer to Figure 2 for the location of NO_2 to No converter. The NO_2 to NO converter uses a catalyst heated to a controlled temperature (325 °C) to convert any NO_2 in the sample to NO. The NO_2 to NO converter assembly also houses a catalytic Ozone destroyer that removes Ozone from the instrument exhaust. To obtain accurate and stable results, the converter must operate at above 96% efficiency.

Figure 8 – NO_2 to NO Converter

1.5.8 Measurement Cell

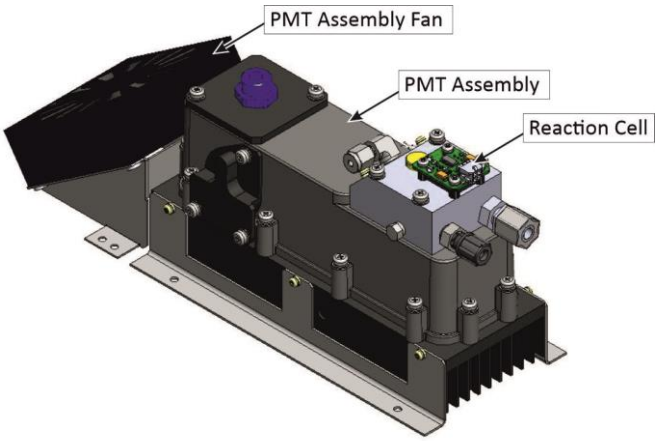

Figure 9 – Measurement Cell

1.5.8.1 PMT Assembly

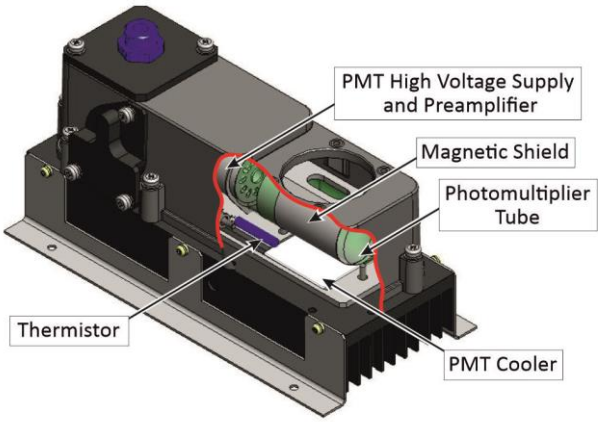

Figure 10 – PMT Assembly

Photomultiplier Tube (PMT)

Refer to Figure 10 for the location of PMT. The PMT detects the amount of light reaching its sensors. The selective filtering of light reaching the PMT allows for direct measurement of NO reacting with O_3 in the reaction cell.

PMT Cooler and Thermistor

Refer to Figure 10 for the location of PMT cooler and thermistor. The PMT cooler and thermistor are mounted below the PMT. They ensure that the PMT is operated at a constant 13 °C. This reduces the measurement noise of the PMT.

PMT High Voltage Supply and Preamplifier

Refer to Figure 10 for the location of PMT high voltage supply and preamplifier. This is a single component within the PMT assembly housing. Its function is to supply high voltage to the PMT and to amplify the photocurrent signal from the PMT.

Magnetic Shield

Refer to Figure 10 for the location of magnetic shield. The magnetic shield is used to protect PMT from electromagnetic radiation. Which will reduce the amount of noise generated in the PMT.

1.5.8.2 Reaction Cell

Refer to Figure 9 for the location of reaction cell. The reaction cell is where O3 and NO mix to create a chemiluminescence reaction which emits photons. A portion of this light is filtered to a specific wavelength region (> 665 nm) by the optical bandpass filter and measured by the PMT.

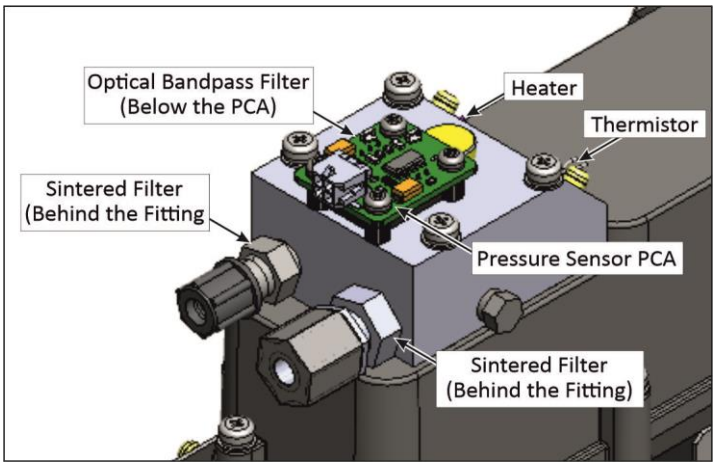

Figure 11 – Reaction Cell

Optical Bandpass Filter

Refer to Figure 11 for the location of optical bandpass filter. The optical bandpass filter is constructed of coloured glass that only allows the transmission of light above 665 nm. It is used to prevent measurement of interfering compounds.

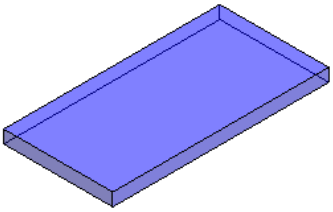

Figure 12 – Optical Bandpass Filter

Heater and Thermistor

Refer to Figure 11 for the location of heater and thermistor. Heater and thermistor are mounted in the reaction cell. They are used in this instrument to keep the cell temperature at a stable and constant 50 °C.

Sintered Filter

Refer to Figure 11 for the location of sintered filter. Three sintered filter are used in the reaction cell two sintered filters are behind the fittings and one is below the pressure sensor PCA to prevent light entering the reaction cell and protecting from particulate matter.

Pressure Sensor PCA

Refer to Figure 11 for the location of pressure sensor PCA. The pressure sensor PCA has an absolute-pressure transducer that is mounted on the reaction cell and sealed via a gasket. This allows the pressure sensor PCA to measure the sample air pressure in the reaction cell. This pressure reading is used to verify sample flow and correct measurement readings for pressure variations.

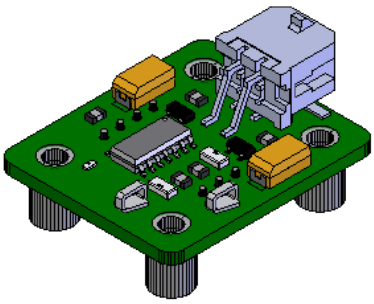

Figure 13 – Pressure Sensor PCA

1.5.8.3 PMT Assembly Fan

Refer to Figure 9 for the location of PMT assembly fan. The PMT assembly fan is mounted near the heatsink to remove the heat generated by PMT cooler and maintain the measurement cell temperature.

1.5.9 Pneumatic Tubing

The pneumatic tubing inside this instrument is specially designed for use in Ecotech Serinus instruments. It has the flexibility of Silicone tubing with the added inner sheath of PVDF to prevent contamination of the sample. Care should be taken when removing and inserting the tubing into the fittings.

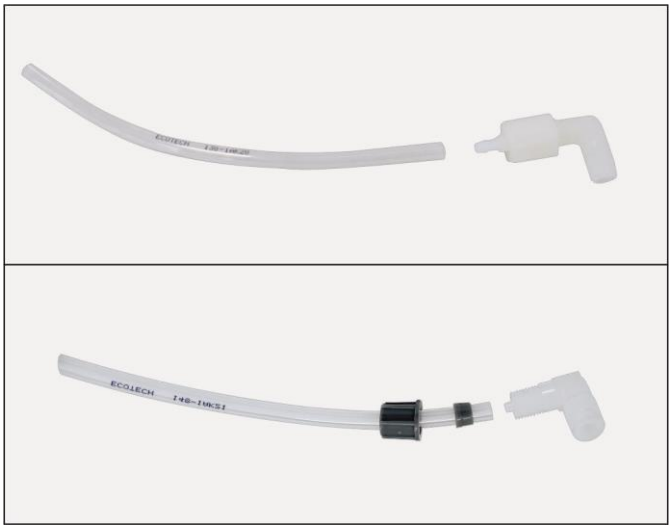

Figure 14 – Ecotech Tubing

1.5.10 Main Controller PCA

Refer to Figure 2 for the location of main controller PCA. The main controller PCA controls all the processes within the instrument. As well as the on-board microprocessor, it contains a battery backed

clock, calendar, analog to digital converters and many other circuits for signal processing and control. The ambient pressure and chassis temperature sensors are also located on this board. The main controller PCA is located above all other components within the instrument. It pivots on hinges to allow access to the components underneath.

CAUTION

Never place objects on top of the main controller PCA as it may result in damage.

1.5.11 Rear Panel

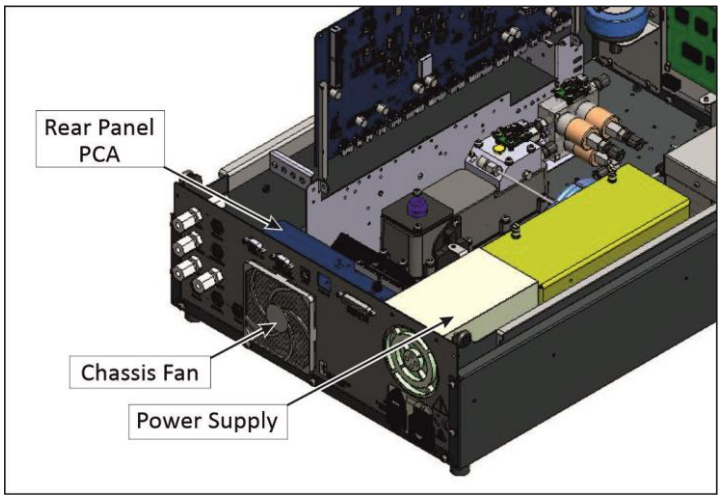

Figure 15 – Rear Panel

1.5.11.1 Rear Panel PCA

Refer to Figure 15 for the location of rear panel PCA. The rear panel PCA contains all the connections for external communications, including analog input, analog output, digital inputs, digital outputs, RS232, USB, and TCP/IP network connection (optional). Refer to Section 4.4.4 for details of all the jumper's function.

1.5.11.2 Chassis Fan

Refer to Figure 15 for the location of chassis fan. The chassis fan is assembled to the back side of the instrument to maintain the Serinus 40 temperature. Fan filter is also installed with the fan to prevent the instrument from dust.

Note: Clean the chassis fan filter on regular interval (refer to Section 6.4.2).

1.5.11.3 Power Supply

Refer to Figure 15 for the location of power supply. The power supply is a self-contained unit housed in a steel case designed to meet all the relevant safety and EMC requirements. The new revision of power supply is different to the previous revision as there is no need to set the operating voltage switch because it is autoranging.

The output of the power supply provides +12 V, +5 V, -12 V and +3.3 V to the instrument.

ON/OFF Switch

The ON/OFF switch is located on the rear panel (bottom right facing the rear of the instrument), refer to Figure 16. It is part of the power supply.

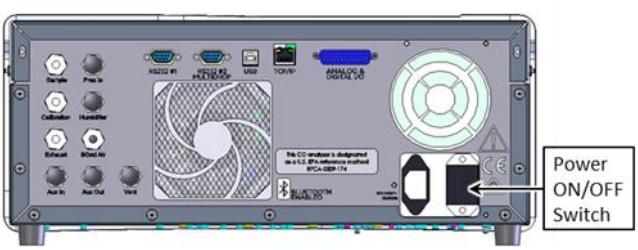

Figure 16 – Power ON/OFF Switch

1.5.12 Communications

Communication between the instrument and either a data logger, laptop or network can be performed with the following communication connections located on the rear panel (refer to Figure 23). These connections can be used for downloading data, onsite diagnostics, maintenance and firmware upgrades.

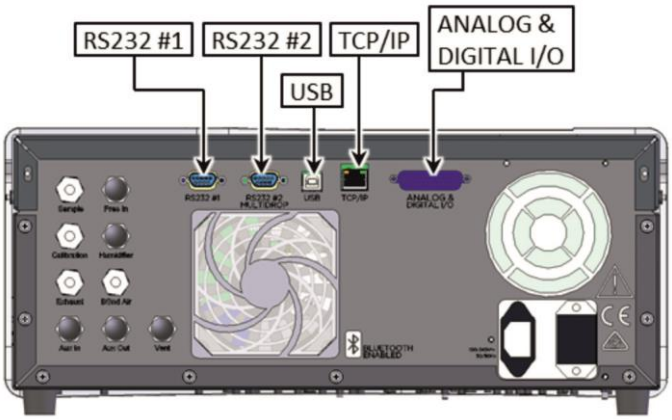

Figure 17 – Communication Connections

RS232 #1

This port is designed to be used for simple RS232 communication.

RS232 #2

This port is designed to be used for simple RS232 communication or in multidrop configuration.

USB

This port can be used for instrument communications with equipment through a standard USB port.

TCP/IP Network (optional)

This port is best used for remote access and real-time access to instruments when a network is available to connect with.

Analog & Digital I/O

The analog/digital port sends and receives analog/digital signals to other devices. These signals are commonly used to activate gas calibrators or for warning alarms.

Analog Outputs

The instrument is equipped with three user definable analog outputs. The outputs are menu selectable as voltage output 0 - 5, 0.25 - 5 or 0.5 - 5 VDC or current output 0 - 20, 2 - 20 or 4 - 20 mA. The current output can also be configured as a voltage output of 0 - 10 V, by configuring the jumpers (JP3) on the rear panel PCA.

Refer to Section 4.4 for more detail.

Analog Inputs

The instrument is also equipped with three analog voltage inputs (0 - 5 VDC CAT 1) with resolution of 15 bits plus polarity.

CAUTION

Exceeding these voltages can permanently damage the instrument and void the warranty.

Digital Status Inputs

The instrument is equipped with eight logic level inputs (0 - 5 VDC CAT 1) for the external control of zero/span calibration sequences.

CAUTION

Exceeding these voltages can permanently damage the instrument and void the warranty.

Digital Status Outputs

The instrument is equipped with eight open collector outputs, which will convey instrument status conditions and warning alarms such as no flow, sample mode, etc.

CAUTION

Exceeding 12 VDC or drawing greater than 400 mA on a single output or a total greater than 2 amps across the eight outputs can permanently damage the instrument and void the warranty.

Bluetooth

This allows for remote access of the instrument to any Android device with the **Serinus remote Application** installed. It uses Bluetooth to control the instrument, view parameters, download data and construct real-time graphs.

2. Installation

2.1 Initial Check

Packaging

The Serinus 40 is transported in packaging which is specifically designed to minimise the effects of shock and vibration during transportation. Ecotech recommends that the packaging be kept if there is a likelihood that the instrument is going to be relocated.

Note: The red plastic caps that seal the pneumatic connections during transport must be removed prior to operation.

Items Received

With the delivery of the Serinus 40, the user will receive the following:

Table 3 – List of Items Received

Item Name	Part No.	Image
Ecotech Serinus 40 analyser	E020040	Refer to Figure 18, callout 7.
Green Ecotech Resources USB Stick	H030137-01	Refer to Figure 18, callout 10.
Manual (hardcopy optional)	M010028	-
USB Memory Stick	H030021	Refer to Figure 18, callout 9.
USB Cable	COM-1440	Refer to Figure 18, callout 8.
Keys for Slam Lock	-	Refer to Figure 18, callout 11.
Data Sheet	-	Refer to Figure 18, callout 12.
Power Lead (120 V)*	C040007	Refer to Figure 18, callout 2.
Power Lead (240 V)*	C040006	Refer to Figure 18, callout 1.
	C040008	Refer to Figure 18, callout 3.
	C040009	Refer to Figure 18, callout 4.
	C040010	Refer to Figure 18, callout 5.
	C040054	Refer to Figure 18, callout 6.

*The power lead received depends on the power supply of the country (120 V or 240 V).

Note: Check that all these items have been delivered undamaged. If any item appears damaged, contact your supplier before turning the instrument ON.

Note: It is recommended to kept packaging material for transport or storage purpose.

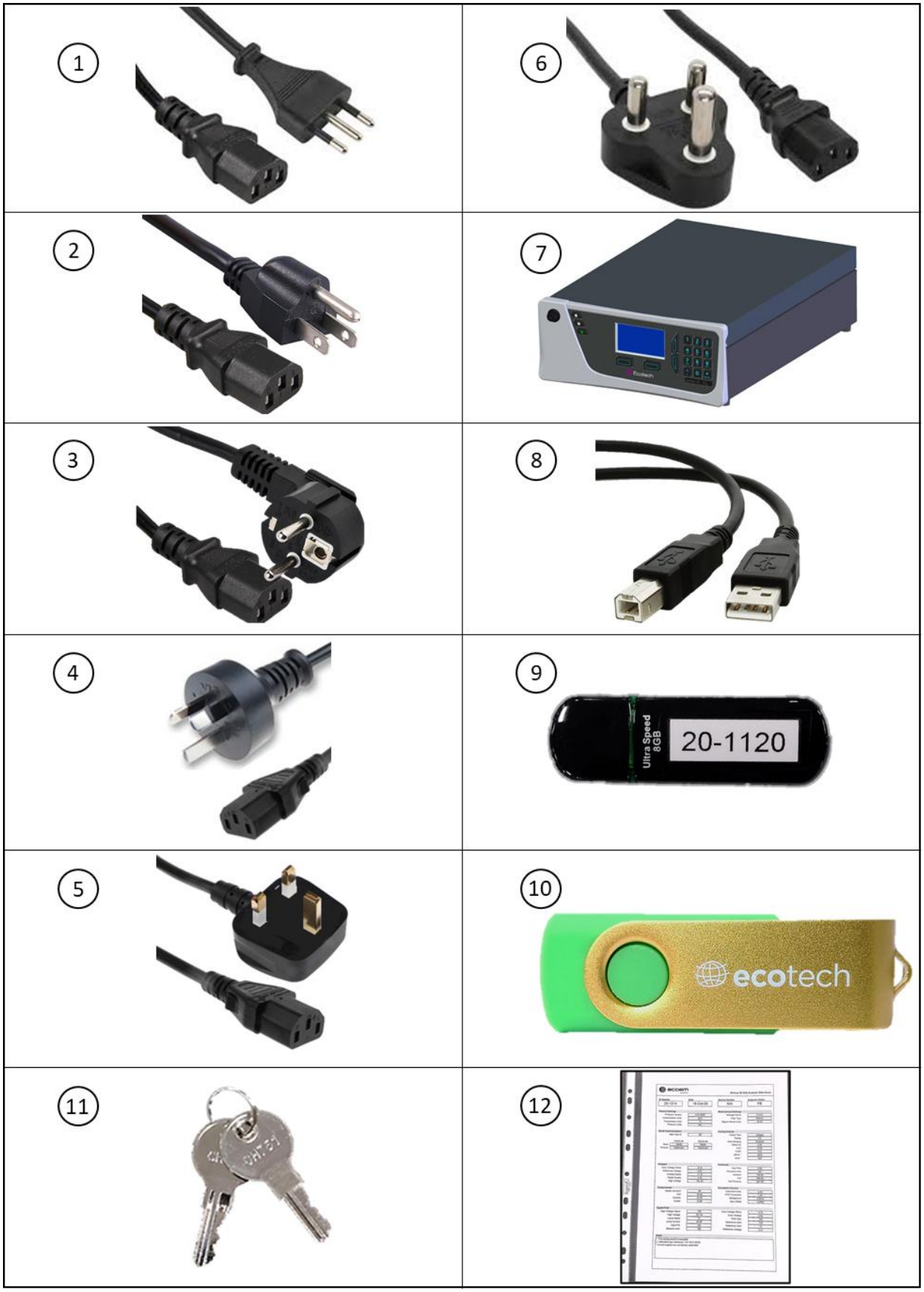

Figure 18 – Received Item

Opening the Instrument

Check the interior of the instrument with the following steps:

1. Refer to Figure 19. Remove the thumb screws located on the rear panel.

Figure 19 – Opening the Instrument – 1

2. Refer to Figure 20. Unlocked the slam lock using keys provided with instrument.

Figure 20 – Opening the Instrument – 2

3. Refer to Figure 21. Open the chassis lid latch by pressing in the slam lock located on the front panel.

Figure 21 – Opening the Instrument – 3

4. Refer to Figure 22. To completely remove the lid, slide the lid backwards until the rollers line up with the gaps in the track and lift the lid upwards to remove from the instrument.

Figure 22 – Opening the Instrument – 4

5. Check that all pneumatic and electrical connectors are connected. If not, reconnect.
6. Check for any visible and obvious damage. If damage exists contact your supplier and follow the instructions in claims for Damaged Shipments and Shipping Discrepancies at the front of this manual.

2.2 Installation Notes

When installing the instrument the following points must be taken into account:

- The instrument should be placed in an environment with minimal dust, moisture and variation in temperature (refer to Section 2.4 and 2.5 for specific approval set-up).
- For best results the instrument should be located in a temperature and humidity-controlled environment (air conditioned shelter). An enclosure temperature of 25 - 27 °C is optimum.
- Whether in a rack or placed on a bench, the instrument should not have anything placed on top of it or touching the case.
- Instruments should be sited with easy access to the front panel (instrument screen/USB memory stick) and to the rear panel (communication ports/pneumatic connections).
- It is recommended that the sample line be as short as possible and/or a heated manifold be used for sampling (minimising moisture condensation in the sample).
- Do not pressurize the sample line under any circumstances. Sample should be drawn through the instrument under atmospheric pressure. This should be achieved by using an external vacuum pump connected to the exhaust port of the instrument.
- When supplying span gas, ensure the flow is approximately 1 slpm and excess is sufficiently vented.

Note: The power ON/OFF switch is accessible from the rear of the instrument only. Install the instrument so that the ON/OFF power switch is accessible.

2.3 Instrument Set-Up

After installing the instrument the following procedures should be followed to ready the instrument for monitoring:

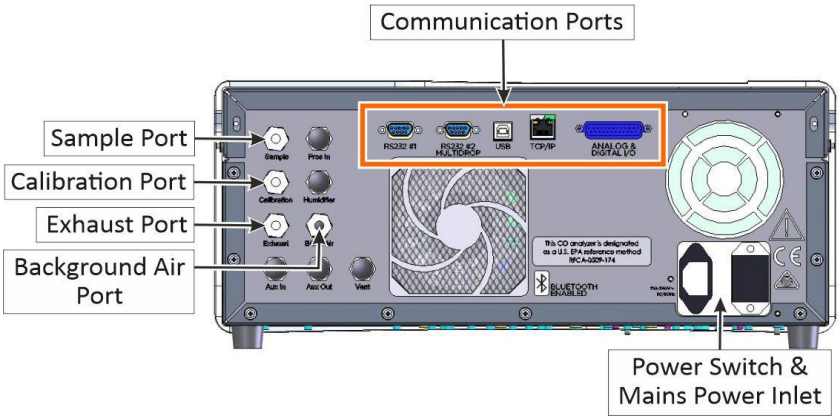

Figure 23 – Instrument Rear Panel

2.3.1 Power Connections

CAUTION

Hazardous voltages exist within the instrument. Do not remove or modify any of the internal components or electrical connections whilst the mains power is ON.

CAUTION

Always unplug the equipment prior to removing or replacing any components.

CAUTION

Do not replace the detachable mains supply cord with an inadequately rated cord. Any mains supply cord that is used with the instrument must comply with the safety requirements (250 V/10 A minimum requirement).

CAUTION

Ensure that the mains supply cord is maintained in a safe working condition.

CAUTION

When connecting the mains power to the instrument, the following must be adhered to otherwise the safety and the reliability of the instrument may be compromised.

- A three pin mains power cord with a protective earth conductor MUST be used.
- The mains power outlet (wall socket) must be in the range of 100 - 240 VAC, 50 - 60 Hz.
- The mains power outlet must be protected by an earth leakage protection circuit.

- Refer to Figure 24. Connect the instrument's power cord into the instrument and mains power outlet.

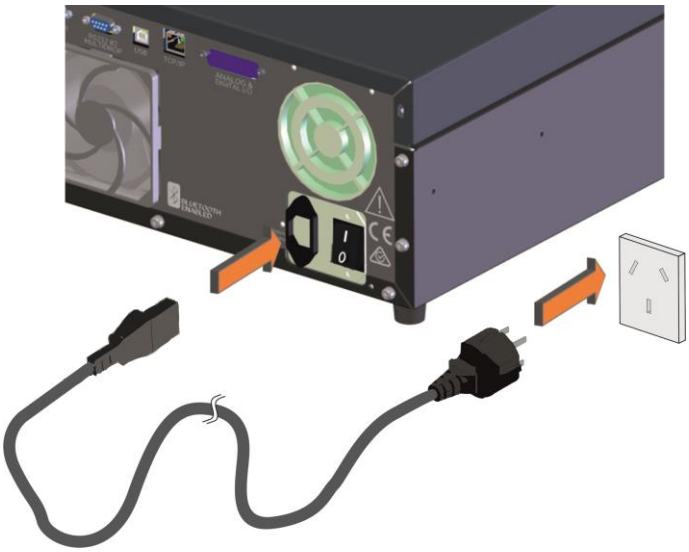

Figure 24 – Connect Power Cord

- Refer to Figure 25. Turn ON the power switch.

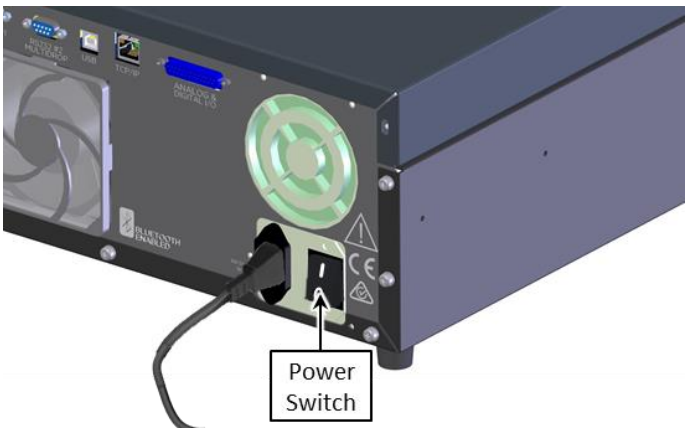

Figure 25 – Turn ON Power Switch

2.3.2 Pneumatic Connections

The Serinus 40 has four pneumatic ports on the rear panel of the instrument: the **Sample Port**, the **Calibration Port**, the **Exhaust Port** and the **Background Air Port**. All tubing and fittings used should follow the instructions below:

- Must be made of Teflon® FEP material, Kynar®, stainless steel, glass or any other suitably inert material.
- Sample line should be no more than two meters in length with ⅛ inch ID and ¼ inch OD.
- Sample inlet pressure should not exceed 5 kPa above ambient pressure.
- Tubing must be cut squarely and any burrs removed.

Procedure

1. Refer to Figure 26. Remove all the dust plugs.

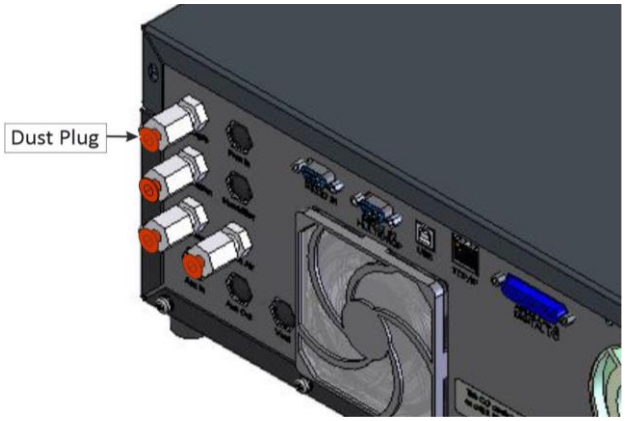

Figure 26 – Dust Plugs

2. Refer to Figure 27. Remove the sample port nut.

Figure 27 – Remove Nut

3. Refer to Figure 28. Inspect the ferrules inside the nut for correct orientation.

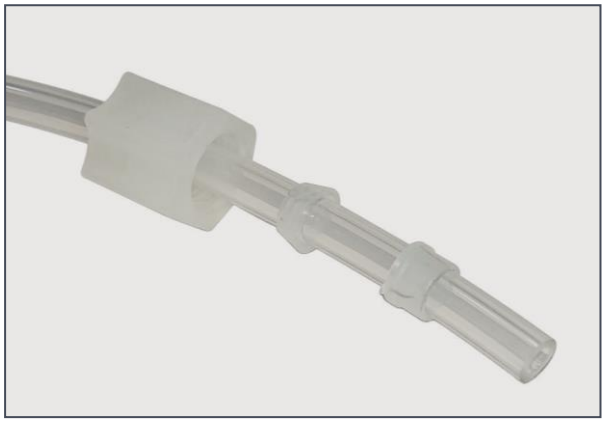

Figure 28 – Ferrules Correct Orientation

4. Refer to Figure 29. Replace the nut loosely, only 2 or 3 threads, on the sample port.

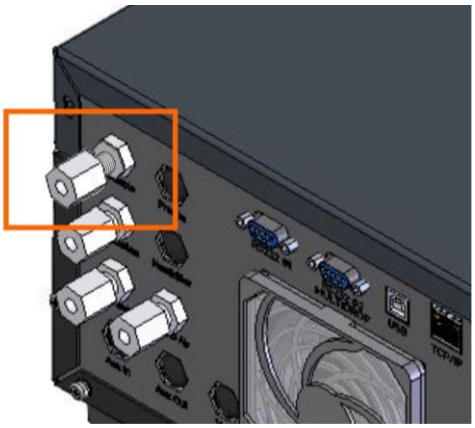

Figure 29 – Replace Nut Loosely

5. Refer to Figure 30. Push the tubing into the end of the nut until you hit the tube stop inside the fitting.

Figure 30 – Insert Tube

6. Refer to Figure 31. Tighten clockwise until finger tight.

Figure 31 – Tighten Nut

7. Nuts should be re-tightened when instrument reaches operating temperature.
8. Follow the same above procedure to connect calibration, exhaust line and background air line.

Sample Port

The sample port must be connected to an ambient source of sample air. When using a sample manifold the Serinus requires at least 1 slpm delivered to the sample manifold (0.6 slpm for measurement plus approximately 50% excess).

Calibration Port

The calibration port can be connected to the span/zero sources. It is recommended that a gas calibrator (Ecotech's Serinus Cal 2000, 3000) be used with a cylinder of nitrogen oxide to deliver precise concentrations of nitrogen oxide. The GPT function of the gas dilution calibrator will also be required for testing the converter efficiency.

Note: All connections to this port should not exceed ambient pressure. A vent is required for excess span gas.

Exhaust Port

The exhaust port is where the reacted sample, calibration gases, background air and bypass flows are exhausted from the instrument. The exhaust port should be connected to the vacuum pump using ¼" OD tubing. The P030004, 240 V vacuum pump (P030005, 110 V) available from Ecotech, should be used to provide the required vacuum and flow for one Serinus 40 analyser.

CAUTION

Oxides of nitrogen are toxic gases. It is recommended that exhaust air is expelled into an unoccupied area, as it contains trace levels of oxides of nitrogen. The exhaust must be a suitable distance from the sample inlet to avoid influencing the ambient measurements.

Background Air Port

The background air port is used to supply air to the Ozone generator within the instrument.

2.3.3 Communications Connections

There are a number of ways to communicate with the instrument, refer to Section 4 for detail.

2.3.4 Instrument Set-Up

1. Refer to Figure 32. Open the lid and make sure the USB memory stick is installed.

Figure 32 – Installation of USB Memory Stick

2. Refer to Figure 33. Check that the battery switch is turned ON at the main controller PCA.

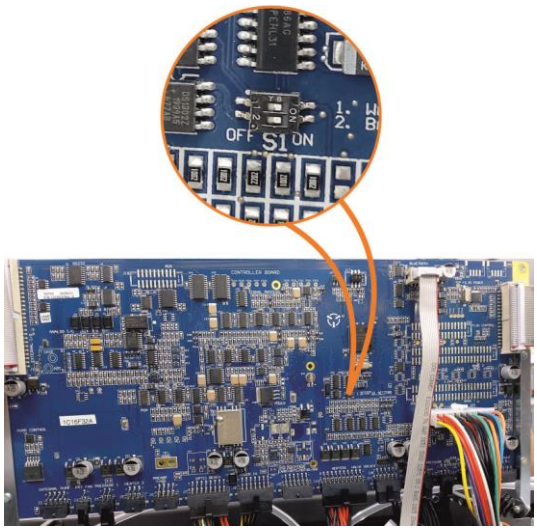

Figure 33 – Switching the Battery ON/OFF

3. Turn ON the instrument and allow the warm-up procedure to complete (refer to Section 3.1).
4. Set the time and date (refer to Section 3.4.8).
5. Set the digital filter to the desired setting (refer to Section 3.4.9).
6. Set the internal data logging options (refer to Section 3.4.22).
7. Set the analog and digital inputs and outputs settings (refer to Section 3.4.24, 3.4.25, 3.4.26 and 3.4.27).
8. Perform a pressure sensor check (refer to Section 6.4.8).
9. Perform a leak check (refer to Section 6.4.4).
10. Leave the instrument to warm-up and stabilise for two-three hours.
11. Follow the procedure to calibrate the instrument (refer to Section 5.4).
12. Follow the procedure for a multipoint precision check (refer to Section 5.6).
13. The instrument is now ready for operation.

2.4 U.S. EPA Reference Set-Up

The Serinus 40 is designated as reference method RFNA–0809–186 by the U.S. EPA (40 CFR Part 53). The Serinus 40 must be used under the following conditions to satisfy this approval:

Range

0 - 0.050 ppm and 0 - 1.0 ppm

Ambient Temperature

20 - 30 °C

Line Voltage

105 - 125 VAC, 60 Hz

Pump

External pump

Filter

Factory setup to meet requirement:

Instrument Settings

If the units in the measurement menu are changed from volumetric to gravimetric (or gravimetric to volumetric), the instrument must be re-calibrated.

The following menu selections must be used:

Calibration Menu

Span Comp:	Disabled

Diagnostics Menu

Press/Temp /Flow Comp:	ON
Diagnostic Mode:	Operate
Control Loop:	Enabled

The instrument must be operated and maintained in accordance with this user manual.

The Serinus 40 Analyser is designated U.S. EPA reference method with or without the following options/items:

- Rack mount assembly
- Optional ethernet port

2.5 EN Type Approval Set-up

The Serinus 40 has been certified to TÜV performance standards for Continuous Ambient Air Quality Monitoring Systems. The certificate number is TÜV 936/21221977/A. The Serinus 40 must be used under the following conditions to meet EN requirements:

Range (NO)

0 - 1000 ppb

Range (NO_2)

0 - 260 ppb

Ambient Temperature

0 - 30 °C

Instrument Settings

The instrument must be operated and maintained in accordance with this user manual.

The following menu selections must be used:

Calibration Menu

Span Comp:	Disabled

Diagnostics Menu

Press/Temp/Flow Comp:	ON
Diagnostic Mode:	Operate
Control Loop:	Enabled

2.6 Transporting/Storage

Transporting the instrument should be done with great care. It is recommended that the original packaging material the instrument was delivered in should be used when transporting or storing.

When transporting or storing the instrument the following points should be followed:

1. Turn OFF the instrument and allow it to cool down.
2. Remove all connections of pneumatic pipe, power cables and communication cables from the instrument.
3. Refer to Figure 33. If storing over a long period (six months) turn the battery OFF by switching the DIP switch (S1) on the main controller PCA.
4. Remove the instrument from the rack.

5. Refer to Figure 34. Seal each pneumatic ports with a dust plug.

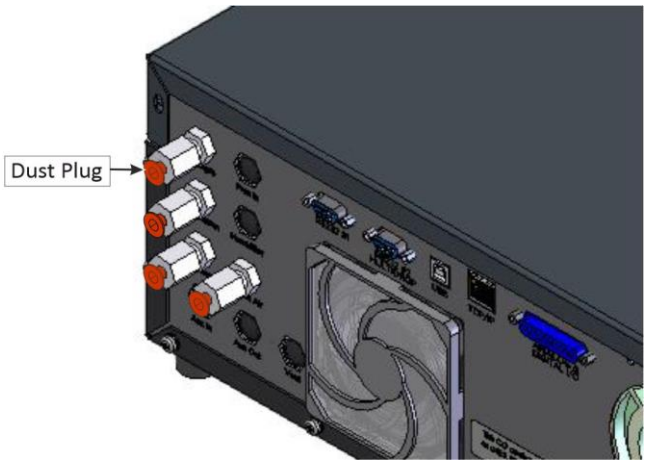

Figure 34 – Dust Plugs

6. Remove the USB memory stick and pack with instrument (refer to Figure 32).
7. If you have the IZS option installed refer to Section 8.10.3 for specific transporting and storage instructions.
8. Place the instrument back into a plastic bag with desiccant packs and seal the bag (ideally the bag supplied upon delivery).
9. Refer to Figure 35. Place the instrument back into the original foam and box it was delivered in. If this is no longer available find some equivalent packaging that provides protection from damage.

Note: Ecotech recommended to use the same packing material in which instrument is delivered.

10. The instrument is now ready for long term storage or transportation.

Note: After transport or storage the instrument must be set-up and calibrated (refer to Section 2.3.4).

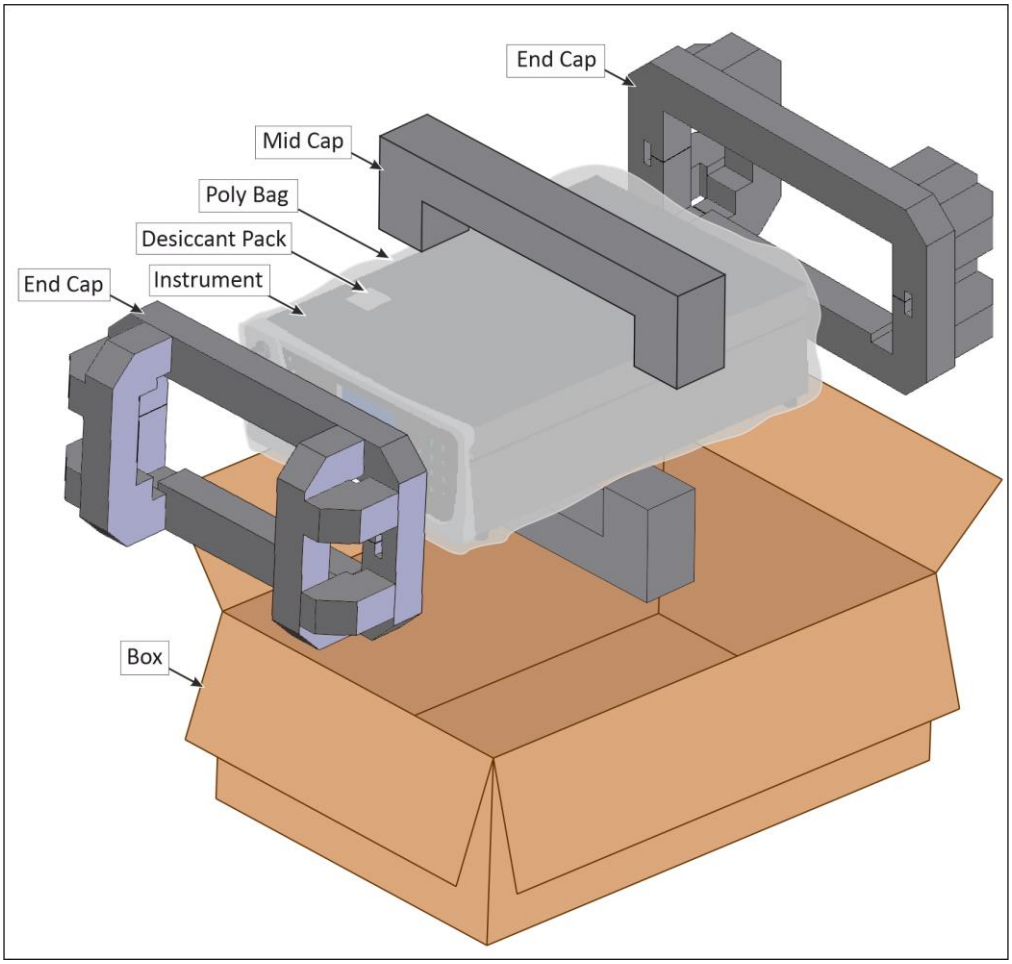

Figure 35 – Packing Instruction

3. Operation

3.1 Warm-Up

When the instrument is first turned ON it must go through a period of adjustment and calibration. No measurements are taken during this warm-up period.

The following activities occur during warm-up:

High Volt Check

Checks to see if the flag to run the high voltage tuning is active.

High Volt Adjust

The high voltage digital pot is adjusted to set the high voltage supply to the PMT for optimal range and performance.

Converter is Cold/Warm

The instrument progressively increases the temperature of the NO_2 to NO converter until it reaches the desired temperature of 325 °C. When heating from cold the NO_2 converter will take approximately 60 minutes to reach the desired temperature. When the converter reaches 250 °C the Ozone generator will be switched ON and analysis of $NO/NO_2/NO_X$ will begin.

After this warm-up has completed the instrument will immediately begin making measurements (refer to Section 3.2).

3.2 Measurement

The Serinus 40 NO_X analyser measures three gases. This is achieved by drawing the sample air through two separate paths NO and NO_X. The third gas NO_2 is derived from the difference between the NO and NO_X.

First a background is performed to determine the level of fluorescence without NO present, thus removing any background noise from the signal.

The instrument alternates between measuring NO and NO_X. It performs this cycle five times before doing another background (the TRACE range instrument only performs three measurement cycles before repeating the background). The sample fill immediately after a background is longer than usual, to clear the reaction cell. One full cycle takes one minute and fifteen seconds to complete (for the TRACE range one full cycle takes fifty one seconds to complete).

Table 4 – Measurements Times

Instrument State	Duration (seconds)	Description
Background Fill	8	Cell fills with background air
Background Meas	3	Background air is measured
NO Sample Fill	3 *9	Cell fills with NO sample * High range instruments

Instrument State	Duration (seconds)	Description
	**+4	** The first sample fill after a background is longer
NO Sample Meas	3	NO sample is measured
NO_X Sample Fill	3 *9	Cell fills with NO_X sample * High range instruments
NO_X Sample Meas	3	NO_X sample is measured

3.3 General Operation Information

3.3.1 Keypad & Display

The instrument is operated with the use of four sets of buttons:

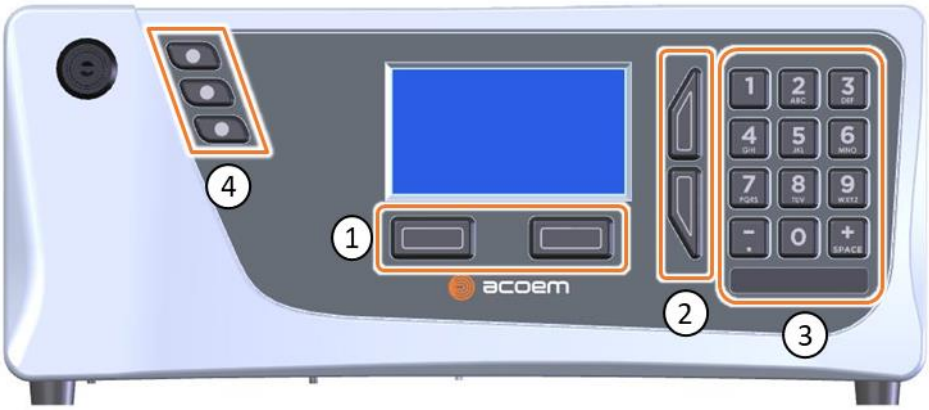

Figure 36 – Front Panel

Selection Buttons (1)

The selection buttons will perform the function specified directly above it on the screen. Generally this involves opening a menu, editing a value, accepting or cancelling an edit operation or starting an operation.

Scrolling Buttons (2)

The scrolling buttons allow the user to scroll up and down through menus or selection boxes. The scrolling buttons are also used to scroll side to side through editable fields such as: Dates, Times, Numbers etc.

On the home screen these buttons are used for adjusting the screen contrast. Press and hold the up button to increase contrast; press and hold the down button to decrease.

Keypad (3)

The keypad contains the numbers 0 - 9, a decimal point/minus key (.) and a space/plus key (+SPACE).

In the few cases where letters can be entered, the number keys act like a telephone keypad. Every time a number key is pressed, it cycles through its choices. The up/down arrow keys scroll through all the numbers and the entire alphabet.

Table 5 – Front Panel Buttons Function

Button	Function
1	1 or space, underline
2	2, A, B, C, a, b, c
3	3, D, E, F, d, e, f
4	4, G, H, I, g, h, i
5	5, J, K, L, j, k, l
6	6, M, N, O, m, n, o
7	7, P, Q, R, S, p, q, r, s
8	8, T, U, V, t, u, v
9	9, W, X, Y, Z, w, x, y, z
0	0 or space, underline
(+SPACE) and key (.)	**When editing a floating point number:** The key (.) inserts a negative sign if the editing cursor is at the start of the number and negative signs are allowed. Otherwise it moves the decimal place to the current cursor location. inserts a positive sign if the cursor is at the start of the number; otherwise it enters a space. **For non-floating point numbers:** These keys usually increment or decrement the current value by 1. When editing the month field of a date, the (+SPACE) and (.) key change the month.

Instrument Status Light Buttons (4)

Located in the top left corner, these lights indicate the status of the instrument:

- A red light indicates that the instrument has a major failure and is not functioning.
- An orange light indicates there is a minor problem with the instrument, but the instrument may still take measurements reliably.
- A green light indicates that the instrument is working and there are no problems.

In the case of an orange or red light illuminated go to the **Status Menu** to find which components are failing (refer to Section 3.4.4) or press the orange or red status light button to see the pop up box with a full list of current faults.

Press the green status light button at any time to close any open edit box or menu and come back the to the home screen.

If none of instrument status lights are ON and the keypad is backlit, this indicates that the instrument is running the bootloader. The screen will also indicate that it is in bootloader menu.

3.3.2 Home Screen

The home screen is composed of seven parts: readings (1), error/status line (2), instrument activity line (3), selection buttons (4), time/date (5), concentration units (6) and USB status (7).

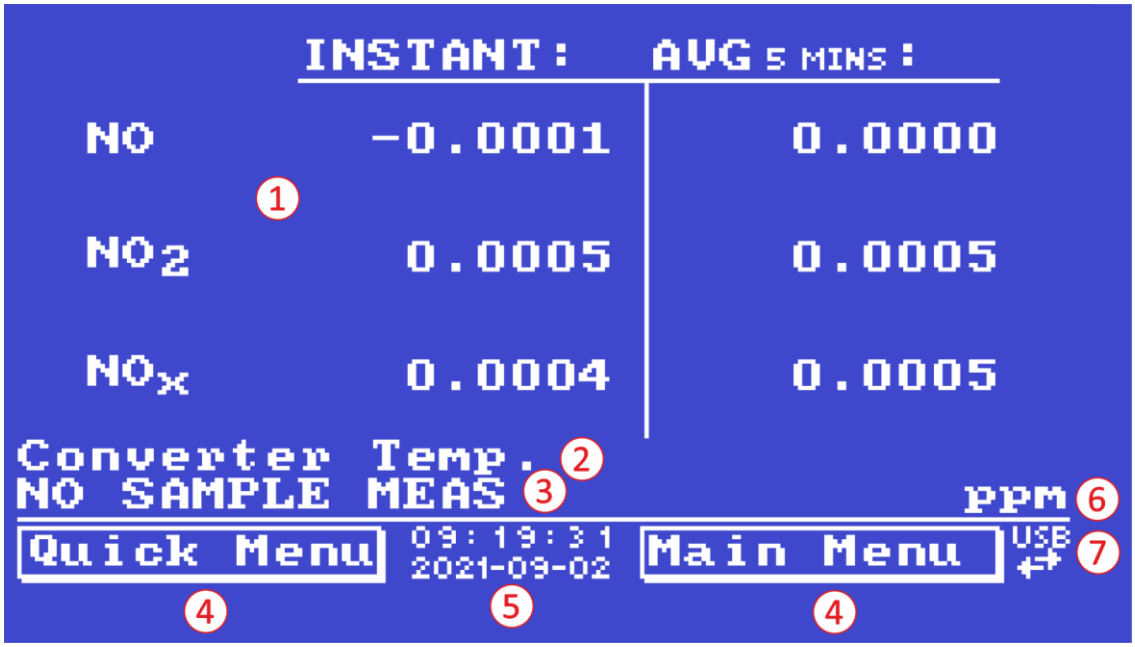

Figure 37 – Home Screen

Readings (1)

Displays the concentration being measured in real-time. The display can be configured to show just the instantaneous data or the instantaneous and average data (refer to Section 3.4.8 **Home Screen**).

Error/Status Line (2)

The error/status line provides the user with information on any problems the instrument may have. It displays the highest priority error or status condition contained in the **Status Menu** (refer to Section 3.4.4).

Instrument Activity (3)

This line shows what function the instrument is currently performing. Generally, it will show three groups of actions: Warm-up, Measurement or Calibration.

Selection Buttons (4)

These buttons are used on the home screen to enter one of two menus. The Quick Menu (refer to Section 3.4.1) contains all information and features necessary for scheduled maintenance. The Main Menu (refer to Section 3.4.2) contains all information and fields available to the user and is generally only used during initial set-up and diagnostics.

Time and Date (5)

The time and date are displayed in between the menu buttons at the bottom of the screen.

Concentration Units (6)

The instrument units are displayed in the bottom right corner of the display.

USB Detection (7)

A USB symbol will be displayed in the bottom right corner when the USB memory stick is plugged in (the USB socket is behind the front panel). If the USB symbol is not shown, the USB memory stick should be inserted. Underneath the USB symbol arrows may be displayed which indicates data transfer. The USB memory stick must not be removed whilst the arrows are visible.

Note: To safely remove the USB memory stick, navigate to the **Quick Menu** and use the **Safely Remove USB Stick** function (refer to Section 3.4.1).

3.4 Menus & Screens

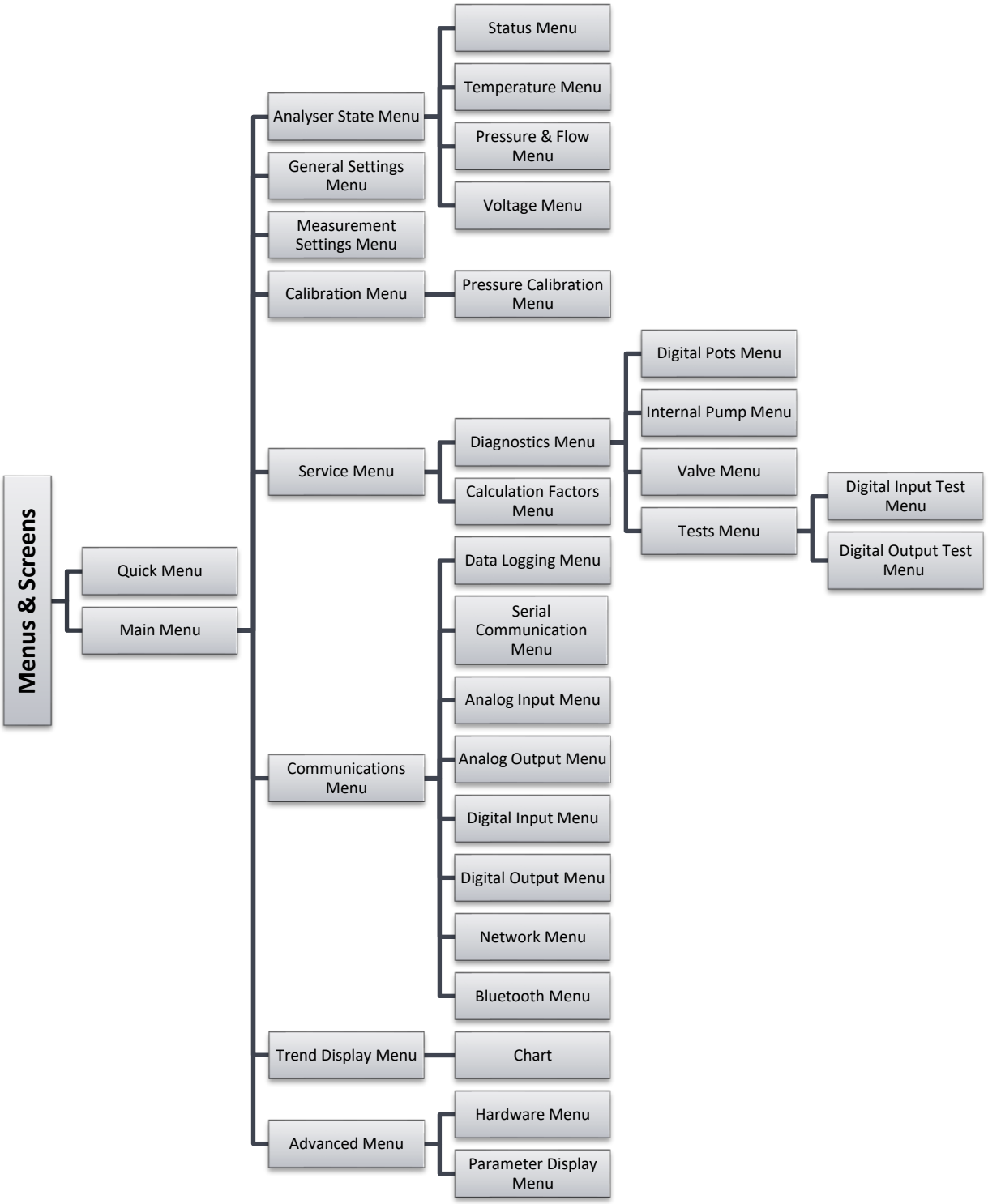

The menu system is divided into two sections selectable from the **Home Screen**: The **Quick Menu** and the **Main Menu**. The **Quick Menu** contains all information and operations necessary during scheduled maintenance visits. The **Main Menu** contains all fields that are accessible to the user. It provides information on component failures and measurement parameters as well as editable fields and test procedures.

In general, editable parameters are displayed in bold font. Non-editable information is displayed in a thin font. Some parameters may become editable based on the state of the instrument.

For example, the manual calibration type and mode can only be changed when the instrument has finished the warm-up process.

3.4.1 Quick Menu

The **Quick Menu** contains all the maintenance tools in one easy to use screen. It allows operators to perform calibrations, check important parameters and review the service history.

Figure 38 – Quick Menu Screen

Span Calibrate NOx	This field is used to perform a span calibration adjustment and should only be used when a known stable concentration of span gas is being drawn through the reaction cell and the reading is stable. Activating the span calibrate field for a named gas will open a dialog box. Enter the concentration of the span gas that the instrument is sampling and press **Accept**.
Span Calibrate NO **[Multiple Gains Enabled]**	This field is used to perform a span calibration adjustment and should only be used when a known stable concentration of span gas is being drawn through the reaction cell and the reading is stable. Activating the span calibrate field for a named gas will open a dialog box. Enter the concentration of the span gas that the instrument is sampling and press **Accept**.
Event Log	This field enters a screen with a log of all the events that the instrument has performed. These events include errors and warnings. This log is stored on the removable USB memory stick. The log is organised by month. When the user enters this screen, they will be prompted to enter the month for which they wish to view events.

Instrument	This field allows the instrument to be set to either **Online** (normal instrument operation) or In **Maintenance** (data is flagged as invalid).
Safely Remove USB Stick	Always select this menu item before removing the USB memory stick or select the same menu item from the **Service Menu** (refer to Section 3.4.12). Failure to do this may cause corruption of the memory stick.
Gas to Measure	This field allows the user to select whether the instrument will only measure NO, only measure NO_x or measure all (NO, NO_x and NO_2).
Instrument Gain **[Multiple Gains Disabled]**	This is a multiplication factor which is used to adjust the concentration measurement to the appropriate level (set by performing a **Span Calibrate**). This should be recorded after each calibration in the station log book.
NO Gain **[Multiple Gains Enabled]**	A multiplication factor used to adjust the concentration measurement to the appropriate level (set at calibration).
NOx Gain **[Multiple Gains Enabled]**	A multiplication factor used to adjust the concentration measurement to the appropriate level (set at calibration).
Next Service Due	A field that notifies the user when the next instrument service is due. This value is editable in the **Next Service Due** field of the Advanced Menu (refer to Section 3.4.32). This field is only displayed two weeks prior to the date displayed in this field or after the date has occurred.

3.4.2 Main Menu

There are seven menus on the **Main Menu** screen.

Figure 39 – Main Menu Screen

Analyser State Menu	Refer to Section 3.4.3.
General Settings Menu	Refer to Section 3.4.8.
Measurement Settings Menu	Refer to Section 3.4.9.
Calibration Menu	Refer to Section 3.4.10.
Service Menu	Refer to Section 3.4.12.
Communications Menu	Refer to Section 3.4.21.

Trend Display Menu	Refer to Section 3.4.30.

3.4.3 Analyser State Menu

Main Menu → Analyser State Menu

This displays the status of various parameters that affect instrument measurements.

Figure 40 – Analyser State Menu Screen

Status Menu	Refer to Section 3.4.4.
Temperature Menu	Refer to Section 3.4.5.
Pressure & Flow Menu	Refer to Section 3.4.6.
Voltage Menu	Refer to Section 3.4.7.
Model	This field will display the instrument model (e.g. Serinus 40).
Nominal Range	The measurement range of the instrument.
Ecotech ID	The Ecotech ID number.
Serial No.	The main controller PCA serial number.
Board Revision	The main controller PCA version.
Firmware Ver.	This field displays the firmware version currently in use on this instrument. This can be important when performing diagnostics and reporting back to the manufacturer.
Power Failure	This field displays the time and date of the last power failure or when power was disconnected from the instrument.

3.4.4 Status Menu

Main Menu → Analyser State Menu → Status Menu

The **Status Menu** presents a list of the current **Pass/Fail** status of the main components. During warm-up, the status of some parameters will be a dashed line.

Figure 41 – Status Menu Screen

Event Log	This field enters a screen with a log of all the events that the instrument has performed. These events include errors and warnings. This log is stored on the USB memory stick. The log is organised by month. When the user enters this screen, they will be prompted to enter the month for which they wish to view events.
Show Error List	This field allows the user to display the list of current errors and warnings on the screen. Pressing either of the selection buttons will clear the screen.
Next Service Due	This field is visible with the next service due date if the service is due within the next two weeks.
Maintenance Mode	Error if the system is "**In Maintenance**" (refer to Section 3.4.12).
+5V Supply	Pass if the +5 V power supply is within the acceptable range.
+12V Supply	Pass if the +12 V power supply is within the acceptable range.
+ Analog Supply	Pass if the analog power supply is within the acceptable range (+12 V).
- Analog Supply	Pass if the analog power supply is within the acceptable range (-12 V).
A2D	Fail only if a problem is detected with the analog to digital conversion.
Cell Temp.	Pass if the cell heater temperature is within ± 10% of the heater set point (refer to Section 3.4.5).
Converter Temp.	The converter temperature should be 325 °C. It must be between 250 °C and 10% of the converter set point to pass.
Converter	Fail, the converter is unsafe to continue running and has shutdown.
Perm Tube Oven **[IZS Internal Span Option]**	Pass if the **Perm Tube Oven** heater temperature is within ± 10% of the **Perm Tube Oven** set point in the **Hardware Menu** (refer to Section 3.4.33).
Cooler	Status of the PMT cooler. It must be 13 °C ± 10% to pass.

High Voltage	Fail if the high voltage value is < 20 or > 30 from the target. Target is 650 V (Standard Level), 700 V (Trace Level) and 550 V (High Level).
System Power	Pass if the system has an adequate electrical supply.
Diagnostic Mode	Error if the electronics are in **Diagnostic Mode** (refer to Section 3.4.14).
Diagnostic PTF Comp	Error if the **Pres/Temp/Flow Comp.** is disabled (refer to Section 3.4.13).
Diagnostic Control	Error if the control loop is disabled (refer to Section 3.4.13).
Valve Manual Control	Error if the valve sequencing is disabled (refer to Section 3.4.16).
Ozonator	Indicates if the **Ozonator** is ON or OFF
NO Conc. V Saturated	Indicates if the voltage of the concentration during measurement is within the limits of the analog to digital converter (-0.26 V to 3.29 V).
NOx Conc. V Saturated	Indicates if the voltage of the concentration during measurement is within the limits of the analog to digital converter (-0.26 V to 3.29 V).
Bkgnd Conc. V Saturated	Indicates if the voltage of the concentration during background measurement is within the limits of the analog to digital converter (-0.26 V to 3.29 V).
Pressure Calibration	Error if the user is performing a pressure calibration.
Flow Fault	Ok when the instrument has acceptable sample flow based on the difference between cell and ambient pressures. With the internal pump option this fault is monitored by a flow sensor.
Cell Press > Ambient	This error occurs when the pressure inside the instrument exceeds the ambient pressure.
Flow Block Temp. **[Internal Pump Option]**	Pass if the flow block temperature is within 10% of the heater set point (to keep a constant accurate flow).
Valve Man. Temp.	Pass if the valve manifold temperature is within ± 10% of the heater set point.
Chassis Temp.	Pass if the chassis temperature is within the acceptable limits (0 - 50 °C).
USB Stick Disconnected	Detects whether a USB memory stick is plugged into the front USB port.
Conv. Temp < Target	Error if the converter temperature has not yet reached ideal operating temperature
Instrument Warmup	Ok once the instrument is out of warm-up status.
Converter Stability	Your converter temperatures are unstable and require servicing.

3.4.5 Temperature Menu

Main Menu → Analyser State Menu → Temperature Menu

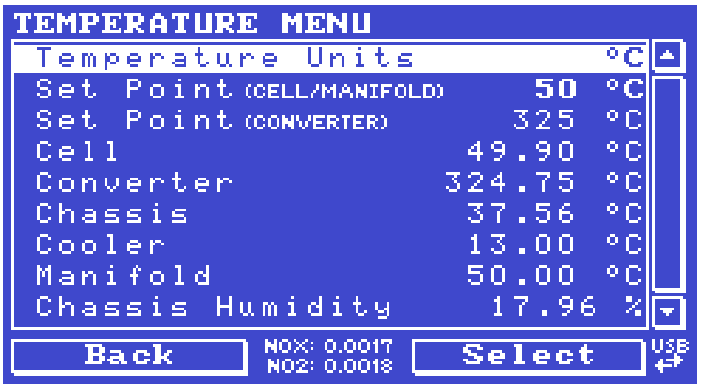

Figure 42 – Temperature Menu Screen

Temperature Units	The current temperature units of the instrument (**Celsius, Fahrenheit** or **Kelvin**).
Set Point (CELL/MANIFOLD)	The temperature set point of the reaction cell and Auxiliary valve manifold. The factory default is 50 °C.
Set Point (CONVERTER)	The temperature set point of the NO_2 to NO. The factory default is 325 °C.
Set Point (FLOW) **[Internal Pump Option]**	The temperature set point of the flow block heater. The factory default is 50 °C.
Cell	Displays current temperature of the reaction cell.
Converter	Displays the current temperature of the NO_2 to NO converter. This line will display **Converter sensor absent** if the converter is not operating or not plugged in.
Flow Block **[Internal Pump Option]**	Displays the current temperature of the flow block.
Perm Tube Oven **[IZS Internal Span Enabled]**	Displays current temperature of the permeation tube oven.
Chassis	Displays the temperature of air inside the chassis, measured on the main controller PCA.
Cooler	Temperature of the PMT cold block.
Manifold	Displays the current temperature of the auxiliary valve manifold.
Chassis Humidity	Displays the humidity percentage of air inside the chassis, measured on the main controller PCA.

3.4.6 Pressure & Flow Menu

Main Menu → Analyser State Menu → Pressure & Flow Menu

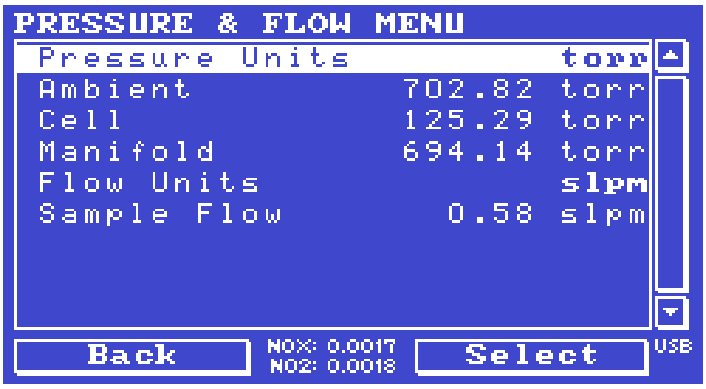

Figure 43 – Pressure & Flow Menu Screen

Pressure Units	Select the units that the pressure will be displayed in (**torr**, **PSI**, **mBar**, **ATM** or **kPa**).
Ambient	Current ambient pressure.
Cell	Current pressure within the reaction cell.
Manifold	Current pressure in the auxiliary valve manifold.
Bypass **[Internal Pump Option]**	Current pressure in the flow block.
Flow Units	Select the units that the sample flow will be displayed in (**slpm** or **L/min**).
Sample Flow	Indicates the gas flow through the sample port of the instrument. The value should be ~0.6 slpm. If there is an error with the sample flow, it will read 0.00 slpm.

3.4.7 Voltage Menu

Main Menu → Analyser State Menu → Voltage Menu

Figure 44 – Voltage Menu Screen

High Voltage	The voltage applied to the PMT (normally set to 650 volts ± 15 V for ambient applications).
Conc. Voltage (RAW)	Voltage from the sensor proportional to the detected signal from the reaction cell. This voltage represents the actual measurement of gas.
Conc. Voltage	Displays the detector voltage after PGA scaling.
+5V Supply	+5 V power supply.
+12V Supply	+12 V power supply.
+Analog Supply	+12 V (primary) power supply. The value should be within ± 2 V.
-Analog Supply	-12 V (primary) power supply. The value should be within ± 2 V.

3.4.8 General Settings Menu

Main Menu → General Settings Menu

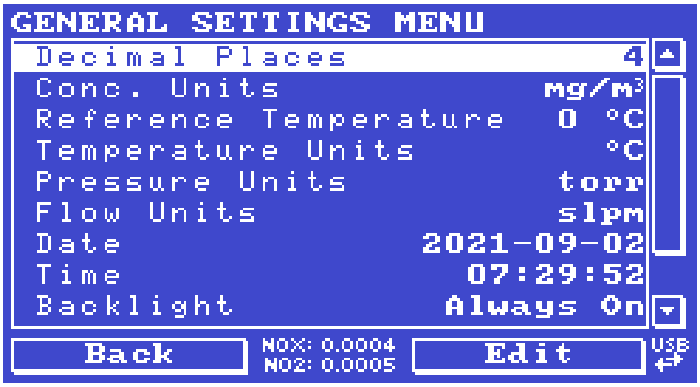

Figure 45 – General Settings Menu Screen

Decimal Places	Select the number of decimal places (0 - 5) used for the concentration displayed on the home screen.
Conc. Units	Sets the concentration units (**ppm**, **ppb**, **ppt**, **mg/m3**, **µg/m3** or **ng/m3**).
Reference Temperature [Gravimetric Units]	This option only appears if concentration units are set to gravimetric (**mg/m3, µg/m3** or **ng/m3).** Select either 0 °C, 20 °C or 25 °C. This sets the standard temperature used from conversion for measured volumetric values.
Temperature Units	Select the units that temperature will be displayed in (**Celsius**, **Fahrenheit** or **Kelvin**).
Pressure Units	Select the units that the pressure will be displayed in (**torr**, **PSI**, **mBar**, **ATM** or **kPa**).
Flow Units	Select the units that the sample flow will be displayed in (**slpm** or **L/min**).
Date	Displays the current date and allows users to edit if required.

Time	Displays the current time and allows users to edit if required.
Backlight	Select the length of time the screen and keypad backlight remain ON after a button press. The setting **Always Off** means the backlight never turns ON; the setting **Always On** means the backlight never turns OFF and the setting **Daytime** means the backlight will turns ON from 7 am to 7 pm or 30 minutes after any operation.
Home Screen	This field allows the user to display concentrations on the **Home Screen** in two formats. The first is **Inst. only** which displays only the instantaneous concentration reading, the second is **Inst & Avg** which displays both instantaneous and average concentration on the **Home Screen**. The average is measured over the time period set in **Measurement Settings Menu** (refer to Section 3.4.9).
Char 0 has Slash	When enabled, the instrument will display the zero character with a slash (Ø) to differentiate it from a capital 'O'.

3.4.9 Measurement Settings Menu

Main Menu → Measurement Settings Menu

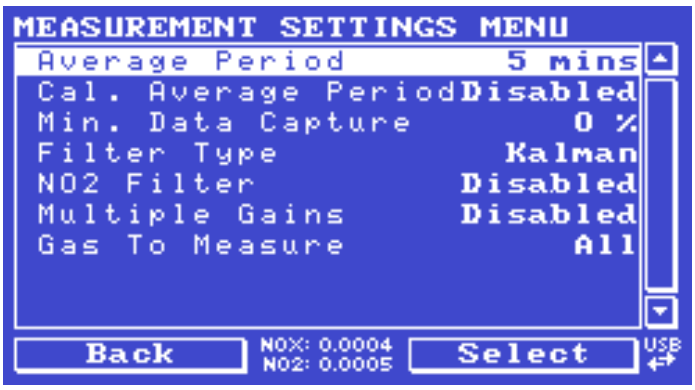

Figure 46 – Measurement Settings Menu Screen

Average Period	Set the time period over which the average will be calculated: Minutes (**1**, **2**, **3**, **4**, **5**, **6**, **10**, **12**, **15, 20** or **30**) or hours (**1**, **2**, **4**, **6**, **8**, **12** or **24**) or rolling hourly averages over the last (**4** or **8**) hours.
Cal. Average Period	When **Enabled** can set the time period over which the calibration average will be calculated when the system is in **Cal. Mode SPAN** or **ZERO**: Minutes (**1**, **2**, **3**, **4**, **5**, **6**, **10**, **12**, **15, 20** or **30**) or hours (**1**, **2**, **4**, **6**, **8**, **12** or **24**) or rolling hourly averages over the last (**4** or **8**) hours. Default is Disabled.
Min. Data Capture	Controls how much of the previous time period needs to be included before the average yields a number. The default is 0%, which reflects past behaviour of the instrument: turning on a machine with 15 minute averaging any time between 1:01 - 1:14 with a setting of 0% would produce #### until 1:15 (because by 1:15, there was at least 1 valid measurement to construct the average from). However, a setting of 100% would

	mean the value stayed #### until 1:30 (because there needs to be a complete 15 minutes worth of measurements to construct the average from).
Filter Type	Sets the type of digital filter used (**None**, **Kalman**, **10 sec**, **30 sec**, **60 sec**, **90 sec**, **300 sec** or **Rolling**). The Kalman filter is the factory default setting and must be used when using the instrument as a U.S. EPA equivalent method or to comply with EN certification. The Kalman filter gives the best overall performance for this instrument.
Rolling Size **[Rolling Filter Type]**	Sets the number of measurements included in the rolling average. Only available if the **Filter Type** is set to **Rolling**.
NO2 Filter	When enabled this function will apply a low pass digital filter to NO_2 measurement removing any artificial signal resulting from pneumatic differences between NO and NO_X gas lines. This function must be set to disabled for U.S.EPA approval.
Multiple Gains	When enabled, **Span Calibrate NO** will appear in the **Calibration Menu**, allowing the user to calibrate for both NO and NO_X gas. New menu items will also appear in the **Calculation Factors Menu** with a label for each gas corresponding to its instrument gain. All the menu items mentioned also appear in the Quick Menu.
Backgrounds **[Gas to Measure – NO or NOx]**	The default setting is enabled. When enabled it allows the user to edit the background interval via the following fields **Time**, **Repeat** and **Units**. When any of the backgrounds fields are edited the instrument will automatically calculate the date and time the next background is due to run and display under each relevant field.
Date **[Backgrounds]**	Displays the date that the next background is due to run.
Time **[Backgrounds]**	Edit and display the time that the next background will run. The time is set using a 24-hour clock.
Repeat **[Backgrounds]**	Defines an interval value for the repeat of the background based on the **Units** selected. This field indicates the delay period; once the specified amount of time has lapsed the background will automatically run again. The user can edit this field but some restrictions applies depending on the **Units** selected. Default is “1”.
Units **[Backgrounds]**	This is where the user can define the type of units for the **Repeat** delay period. For example: A **Repeat** of “**1**” and **Units** of “**Days”** means that a calibration will automatically run every day at the defined time. Default is “Days”.
Gas To Measure	This field allows the user to select whether the instrument will only measure NO, only measure NO_x or measure all (NO, NO_x and NO_2).

3.4.10 Calibration Menu

Main Menu → Calibration Menu

Calibrating the instrument should be done with care (refer to Section 5 before using these menus).

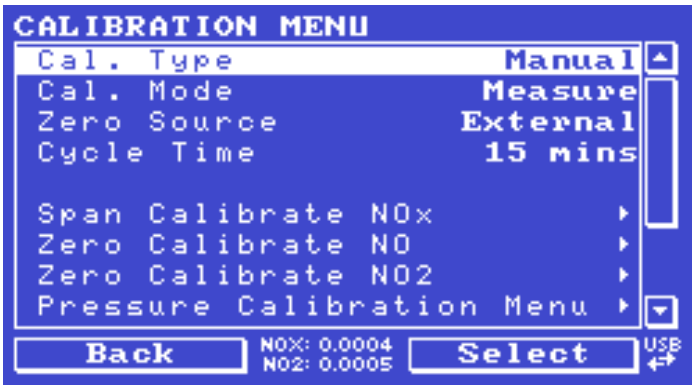

Figure 47 – Calibration Menu Screen

Cal. Type	Depending on the selection in this field, a number of extra menu items will be displayed. These are separately documented in **Manual Mode** (refer to Section 3.4.10.1) and **Timed Mode** (refer to Section 3.4.10.2). Select the Cal. Type field and select either **Timed** or **Manual**. **Timed** mode is an automatic calibration controlled by the: ▪ Interval between cycles ▪ Length of each calibration cycle ▪ Time when the calibration will begin ▪ Check only or automatic compensation Timed calibration with span compensation enabled does not fulfil U.S. EPA approval. **Manual** mode allows the user to choose the type of calibration they wish to perform and will open the appropriate valves in preparation for the user to perform a manual calibration. The setup used will depend on the **Cal. Mode** selected. Manual mode is set as default.
Zero Source	Select whether the instrument will sample from the external calibration port or from the internal zero source when zero gas is requested.
Span Source **[IZS Internal Span Enabled]**	Select whether the instrument will sample from the external calibration port or from the internal IZS source when span gas is requested.
Cycle Time	The duration of each **Cal. Mode** (span and zero) when performing **Cycle Mode** (refer to Section 3.4.10.1) or **Cal. Type** is set to **Timed** (refer to Section 3.4.10.2).
Span Calibrate NO **[Multiple Gains Enabled]**	This field is used to perform a span calibration adjustment and should be only used when a known

	concentration of span gas is running through the reaction cell and the reading is stable. Activating the span calibrate field for a named gas will open a dialog box. Enter the concentration of the span gas that the instrument is sampling and press **Accept**.
Span Calibrate NOx	This field is used to perform a span calibration adjustment and should be only used when a known concentration of span gas is running through the reaction cell and the reading is stable. Activating the span calibrate field for a named gas will open a dialog box. Enter the concentration of the span gas that the instrument is sampling and press **Accept**.
Perm Conc **[IZS Internal Span Enabled]**	This is the calculated concentration of the gas being released from the permeation oven based on the user settings defined in the **Hardware Menu**. This value should be referred to when selecting internal span mode.
Zero Calibrate NO	This command is used to correct the zero calibration setting. This option should be used only when zero gas is running through the reaction cell (refer to Section 5 before using this command).
Zero Calibrate NO2	This command is used to correct the zero calibration setting. This option should be used only when zero gas is running through the reaction cell (refer to Section 5 before using this command).
Pressure Calibration Menu	This menu allows the user to calibrate the pressure sensors (refer to Section 3.4.11).
Manifold NO	This field displays the auxiliary valve manifold pressure measured during the last calibration for the NO path.
Manifold NOx	This field displays the auxiliary valve manifold pressure measured during the last calibration for the NO_X path.
Temperature	Cell temperature when the last span calibration was performed.
Conv. Efficiency NO2	The efficiency of the conversion of NO_2 into NO, in the NO_2 to NO converter.

3.4.10.1 Manual Mode

These items appear in the **Calibration Menu** when **Cal. Type** is set to **Manual**.

Cal. Mode	When calibration type is set to **Manual** the instruments operational mode can be chosen from the following: ▪ **Measure**: Is the normal measurement through the sample port. ▪ **Zero**: This mode will take air through the calibration port so that a zero calibration can be performed. Data is flagged as zero data. ▪ **Span**: This mode will take air through the calibration port so that a span calibration can be performed. Data is flagged as span data. ▪ **Cycle**: Performs a zero and a span **Cal. Mode** and then returns to measure mode. The length of time spent measuring each calibration mode is set in **Cycle Time** (refer to Section 3.4.10.2). While the instrument is still in the warm-up period (refer to Section 3.1) the **Cal. Mode** cannot be changed from **Measure** mode.

3.4.10.2 Timed Mode

These items appear in the **Calibration Menu** when **Cal. Type** is set to **Timed**.

Date	Enter the date for the next calibration to start.
Time	Enter the time that calibration will be performed. The time is set using a 24-hour clock.
Repeat	This field indicates the delay period; once the specified amount of time has lapsed the calibration will automatically run again. The user can edit this field (from 1 - 20,000 units).
Units	This is where the user can define the type of units for the **Repeat** delay period. For example: A repeat of "**3**" and units of "**Days**" means that a calibration will automatically be performed every three days.
Span Compensation	**Enabled**: the instrument will automatically perform a **Span Calibrate NOx** at the end of the **Cycle Time** and adjust the gain based on the **Span Level**. **Disabled**: performs a precision check only, no adjustment is made. Timed mode with span compensation enabled does not fulfil U.S. EPA approval or EN certification.
Span Level	Enter the concentration of span gas expected. Used when the **Span Compensation** is **Enabled**.

3.4.11 Pressure Calibration Menu

Main Menu → Calibration Menu → Pressure Calibration Menu

Entering this menu will set the valves to the pressure calibration configuration and will disable the Ozone generator; leaving the menu will restore the valves to normal operation and enable the Ozone generator (refer to Section 5.2).

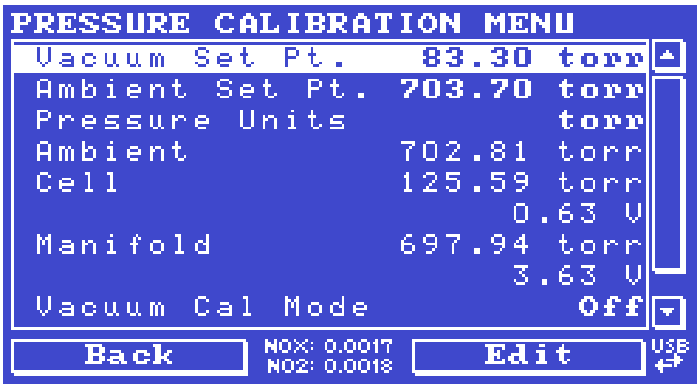

Figure 48 – Pressure Calibration Menu Screen

Vacuum Set Pt.	The zero point for the calibration. Activating this item will open a dialog box of instructions.
Ambient Set Pt.	The high point for the calibration. Activating this item will open a dialog box of instructions.
Pressure Units	Select the units that the pressure will be displayed in (**torr**, **PSI**, **mBar**, **ATM** or **kPa**).
Ambient	The current ambient pressure.
Cell	The current pressure in the reaction cell.
	The current reaction cell pressure displayed as a raw voltage.
Manifold	The current pressure in the auxiliary valve manifold.
	The current auxiliary valve manifold pressure displayed as a raw voltage.
Bypass	The current pressure in the bypass pump.
	The current bypass pump pressure displayed as a raw voltage.
Vacuum Cal Mode	Defaults to Off. When turned On, the valves will be set to the same state as during a **Vacuum Set Pt.** adjustment, but there is no adjustment. Used for checking the accuracy of the vacuum pressure calibration. There are no dialog boxes or prompts, so the user needs to follow similar steps and precautions as during **Vacuum Set Pt.**
Ambient Cal Mode	Defaults to OFF. Similar to **Vacuum Cal Mode**, except the valves are set to check the ambient calibration.

3.4.12 Service Menu

Main Menu → Service Menu

Figure 49 – Service Menu Screen

Diagnostics Menu	Refer to Section 3.4.13.
Calculation Factors Menu	Refer to Section 3.4.20.
Ozone Gen. Control	Allows the user to switch OFF the Ozone generator or let the instrument automatically control the status of the Ozone generator. For safety reasons, the Ozone generator will not be active if there is a flow fault.
Ozone Gen. Status	This field indicates to the user if the Ozone generator is On or Off.
Load Auto-Backup Config.	Loads the auto-backup configuration file. The configuration is automatically backed up every night at midnight.
Load Configuration	Loads a user selectable configuration file from the USB memory stick.
Save Configuration	Saves all of the EEPROM-stored user-selectable instrument configurations to the USB memory stick (calibration and communication settings, units, instrument gain, etc.). If there are problems with the instrument use this function to save settings to the USB memory stick and send this file (together with the parameter list save) to your supplier with your service enquiry.
Save Parameter List	Saves a text file of various parameters and calculation factors. If the user has problems with the instrument use this function to save settings to the USB memory stick and send this file (together with the configuration save) to your supplier with your service enquiry.
Instrument	This field allows the instrument to be set to either **Online** (normal instrument operation) or **In Maintenance** (data is flagged as invalid).
Next Service Due	Displays when the next scheduled service is due.
Safely Remove USB Stick	This command must be activated to safely remove the USB memory stick.
System Restart	Activating this will restart the instrument.

3.4.13 Diagnostics Menu

Main Menu → Service Menu → Diagnostics Menu

Figure 50 – Diagnostics Menu Screen

Digital Pots Menu	Refer to Section 3.4.14.
Internal Pump Menu **[Internal Pump Option]**	Refer to Section 3.4.15.
Valve Menu	Refer to Section 3.4.16.
Tests Menu	Refer to Section 3.4.17.
Pres/Temp/Flow Comp.	On (default): Is used to compensate instrument measurements for environmental fluctuations that might affect readings (pressure, temperature and flow). Off: Is used only when running diagnostics.
Control Loop	**Enabled** (default): Allows the instrument to automatically adjust digital pots and other outputs. **Disabled**: Prevents the instrument from changing most outputs so the service technician can manually control them.

3.4.14 Digital Pots Menu

Main Menu → Service Menu → Diagnostics Menu → Digital Pots Menu

Digital pots are electronically controlled digital potentiometers used for adjustments to operations of the instrument. Each of the digital pots can go from 0 - 255. This menu should be accessed only during diagnostics.

Unless the **Control Loop** is **Disabled** (refer to Section 3.4.13), changes to the pots may be modified by the instrument. This is intentional; some diagnostics are best done with instrument feedback and some are best done without.

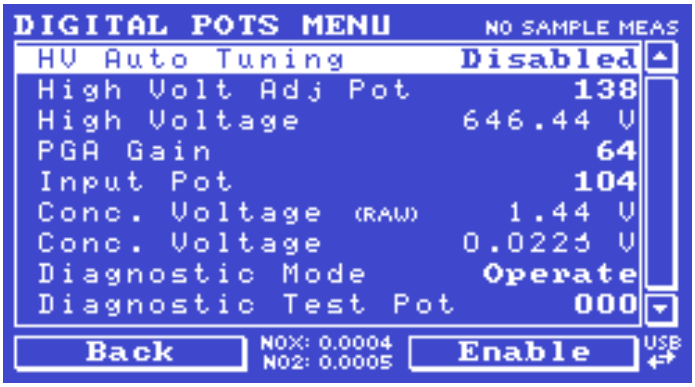

Figure 51 – Digital Pots Menu Screen

HV Auto Tuning	Disabled	When the instrument first starts it will tune the high voltage supply by automatically setting the **High Volt Adj Pot**. After a stable value is reached the instrument will **Disable** the **HV Auto Tuning**. You can force the instrument to re-tune the high voltage supply by setting this field to **Enabled** and rebooting the instrument.
High Volt Adj Pot	130 - 150	Allows manual adjustment of the PMT high voltage supply.
High Voltage	640 - 670	The voltage applied to the PMT.
PGA Gain	1 - 128	Displays the gain of the PGA.
Input Pot	104	Reduces the raw signal to measurable level.
Conc. Voltage (RAW)	0 - 3.1	The concentration voltage measured by the analog to digital converter.
Conc. Voltage	0 - 3.1	The concentration voltage after adjustment for the PGA gain factor.
Diagnostic Mode	Operate	▪ **Operate** (default): Puts the instrument in normal operation mode. ▪ **Preamp**: Injects an artificial test signal into the Preamplifier module mounted in the PMT assembly to verify that the Preamplifier, cabling and electronic circuitry on the main controller PCA is operating correctly. When in this Diagnostic Mode, adjust the Diagnostic Test Pot from 0 - 255. This will produce a change in the concentration voltage as well as the indicated gas concentration.

		▪ **Electrical**: Injects an artificial test signal into the electronic processing circuitry on the main controller PCA to verify that the circuitry is operating correctly. When in this **Diagnostic Mode**, adjust the **Diagnostic Test Pot** from 0 - 255. This will produce a change in the concentration voltage as well as the indicated gas concentration. ▪ **Optic** (Optional): Emits artificial light into the Reaction Cell to simulate a real chemiluminescence reaction. This will verify that the PMT, Preamp and electronic circuitry on the main controller PCA is operating correctly. When in this Diagnostic Mode, adjust the Diagnostic Test Pot from 0 - 255. This will produce a change in the concentration voltage as well as the indicated gas concentration. This menu item is only available if you have installed the optical test lamp (refer to Section 3.4.33).
Diagnostic Test Pot	0	This **Digital Pot** is used for diagnostics only. When in the **Electrical**, **Preamp** or **Optic Diagnostic Mode**, this **Digital Pot** should be adjusted from 0 - 255. This will produce a change in the concentration voltage as well as the indicated gas concentration.

3.4.15 Internal Pump Menu (Option)

Main Menu → Service Menu → Diagnostics Menu → Internal Pump Menu

This menu only appears when the internal pump option is installed. Setting the **Pump Control** to **MANUAL** will automatically disable the valve sequencing.

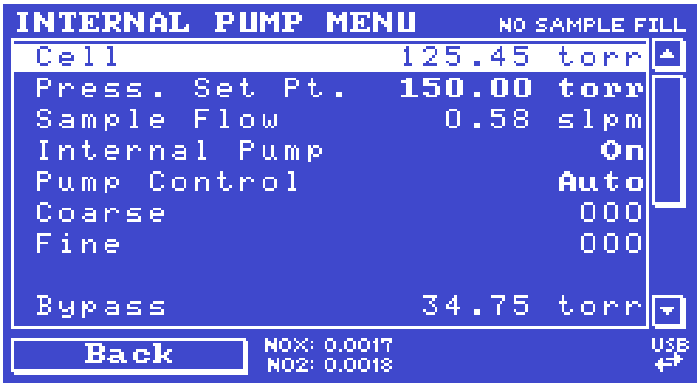

Figure 52 – Internal Pump Menu Screen

Cell	The current pressure in the measurement cell.
Press. Set Pt.	The desired sample pressure target.
Sample Flow	Current sample flow through the instrument. This is only accurate when reading close to the pressure set point.
Internal Pump	This field allows the internal pump to be turned ON or OFF. This field is only editable when the **Pump Control** field is set to **MANUAL**.
Pump Control	Set to **MANUAL** to disable the automatic pump control. **AUTO** allows the flow PID to modify the pump coarse and fine settings. **START** will transition to **AUTO** after one second.

Coarse	Internal pump speed control (**Coarse**). This field is only editable when the **Pump Control** field is set to **MANUAL**.
Fine	Internal Pump speed control (**Fine**). This field is only editable when the **Pump Control** field is set to **MANUAL**.
Bypass	The current pressure in the bypass pump.
Target	The desired pressure target for bypass pump.
Bypass Pump	This field allows the bypass pump to be turned ON or OFF. This field is only editable when the **Bypass Pump Control** field is set to **MANUAL**.
Bypass Pump Control	Set to **MANUAL** to disable the automatic bypass pump control. **AUTO** allows the flow PID to modify the bypass pump coarse and fine settings. **START** will transition to **AUTO** after one second.
Coarse	Bypass pump speed control (**Coarse**). This field is only editable when the **Bypass Pump Control** field is set to **MANUAL**.
Fine	Bypass Pump speed control (**Fine**). This field is only editable when the **Bypass Pump Control** field is set to **MANUAL**.

3.4.16 Valve Menu

Main Menu → Service Menu → Diagnostics Menu → Valve Menu

The **Valve Menu** allows the user to observe the instrument controlled switching of the valves. If the valve is **On** it means the valve is energised. When a three way valve is in the **On** state it will now be in the NC (normally closed) position as shown in the plumbing schematic. When the **Valve Sequencing** is **Disabled,** the user has the ability to turn the valve **Off** and **On** manually. It is recommended that the **Valve Menu** be used by a trained technician following the plumbing schematic (refer to Section 9.5).

Note: When interpreting the information below regarding the flow path through the valve note that (NC = Normally Closed), (NO = Normally Open) and (C = Common).

Figure 53 – Valve Menu Screen

Valve Sequencing	When **Enabled** the valves will turn **ON** and **OFF** under the instruments control (even if the user has manually turned **Off** or **On** a valve). When **Disabled** the valves will change only in response to a user's action.

Sample/Cal	Indicates if the **Sample/Cal** valve on the **Calibration Valve Manifold** is **Off** or **On**. This will determine the port the instrument draws its sample from. **Off** = Flow from NO to C (drawing sample from the **Sample Port**). **On** = Flow from NC to C (drawing sample from the **Calibration Port**).
Internal Zero/Cal	Indicates if the **Internal Zero/Cal** valve on the **Calibration Valve Manifold** is **Off** or **On**. This will determine the port the instrument draws its sample from, when selecting **Cal. Mode → Zero**. **Off** = Flow from NO to C (drawing sample from the BGnd Air Port). **On** = Flow from NC to C (drawing sample from the Calibration Port).
Pressurised Zero (OPT)	Indicates if the optional pressurised zero port valve is **Off** or **On** (refer to Section 8.8).
Pressurised Span (OPT)	Indicates if the optional pressurised span port valve is **Off** or **On** (refer to Section 8.8).
Internal Span A [Optional]	When Internal **Span A** and **B** are **On** the instrument will sample from the **BGnd Air Port** drawing internal zero or internal span depending on the **Internal Zero/Cal** valve.
Internal Span B [Optional]	Same as **Internal Span A** above.
NO Select	Indicates if the **NO Select** valve on the **Auxiliary Valve Manifold** is **Off** or **On**. This valve switches the sample either straight through the NO flow path to the reaction cell or bypasses out the **Exhaust Port**. **Off** = Flow from C to NO (NO flow path bypassed to Exhaust Port). **On** = Flow from C to NC (NO flow path to Reaction Cell).
NOx Select	Indicates if the **NOx Select** valve on the **Auxiliary Valve Manifold** is **Off** or **On**. This valve switches the sample either straight through the NO_x flow path to the reaction cell or bypasses out the Exhaust Port. **On** = Flow from C to NC (NO_x flow path to Reaction Cell). **Off** = Flow from C to NO (NO_x flow path bypassed to Exhaust Port).
Measure/Background	Indicates if the **Measure/Background** valve on the **Auxiliary Valve Manifold** is **Off** or **On**. This valve determines whether the sample is pre-reacted with Ozone before arriving at the reaction cell. This creates no reaction in the reaction cell and enables a 'Background' measurement to be taken. **On** = Flow from C to NC (NO flow path to Pre-Reaction). **Off** = Flow from C to NO (NO and NO_x flow path to Reaction Cell).

3.4.17 Tests Menu

Main Menu → Service Menu → Diagnostics Menu → Tests Menu

Figure 54 – Tests Menu Screen

Screen Test	Performs a screen test by drawing lines and images on the screen so that the operator can determine if there are any faults in the screen. Press a keypad key to step through the test. The up and down arrow keys will adjust the contrast.
Digital Input Test Menu	Refer to Section 3.4.18.
Digital Output Test Menu	Refer to Section 3.4.19.

3.4.18 Digital Input Test Menu

Main Menu → Service Menu → Diagnostics Menu → Tests Menu → Digital Input Test Menu

Figure 55 – Digital Input Test Menu Screen

Input 0..7	Displays the status of the 0 - 7 digital input pins and their corresponding pin out on the analog & digital I/O socket (refer to Figure 80). Value will be 0 or 1.

Note: Entering the **Digital Inputs Menu** will temporarily disable all digital and analog input/outputs. This will affect logging via these outputs. Exiting the menu restores automatic control.

3.4.19 Digital Output Test Menu

Main Menu → Service Menu → Diagnostics Menu → Tests Menu → Digital Output Test Menu

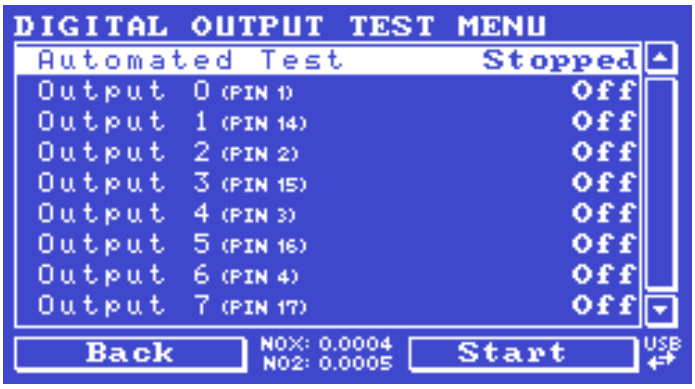

Figure 56 – Digital Output Test Menu Screen

Automated Test	When started will automatically step through each output, turning it **On** and **Off**.
Output 0..7	Displays the state of the output pin (**On** or **Off**) and allows the user to manually set the state.

Note: Entering the **Digital Outputs Menu** will temporarily disable all digital and analog input/outputs. This will affect logging via these outputs. Exiting the menu restores automatic control.

3.4.20 Calculation Factors Menu

Main Menu → Service Menu → Calculation Factors Menu

The **Calculation Factors Menu** provides the user with the values used to calculate different aspects of measurement and calibration.

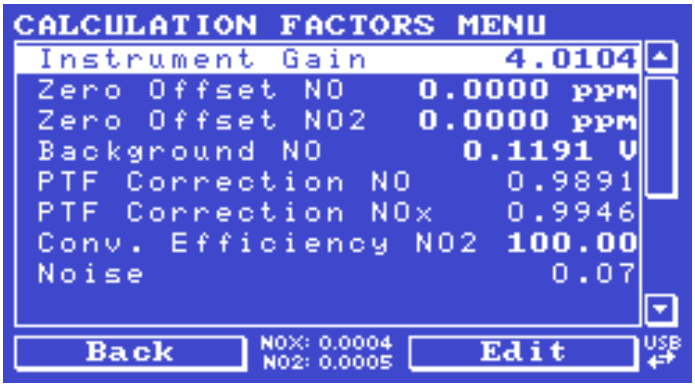

Figure 57 – Calculation Factors Menu Screen

NO Gain **[Use Multiple Gains Enabled]**	A multiplication factor used to adjust the concentration measurement to the appropriate level (set at calibration).

NOx Gain **[Use Multiple Gains Enabled]**	A multiplication factor used to adjust the concentration measurement to the appropriate level (set at calibration).
Instrument Gain **[Use Multiple Gains Disabled]**	A multiplication factor used to adjust the concentration measurement to the appropriate level (set at calibration).
Zero Offset NO	This field displays the offset created from a NO zero calibration. This is the concentration measured from zero air and is subtracted from all readings.
Zero Offset NO2	This field displays the offset created from a NO_2 zero calibration. This is the concentration measured from zero air and is subtracted from all readings.
Background NO	The correction factor calculated from the background cycle (used to eliminate background interferences).
PTF Correction NO	Displays the correction factor applied to the concentration measurement. This correction is for changes in pressure, temperature and flows since the last calibration.
PTF Correction NOx	Displays the correction factor applied to the concentration measurement. This correction is for changes in pressure, temperature and flows since the last calibration.
Conv. Efficiency NO2	The efficiency of the conversion of NO_2 to NO, in the NO_2 to NO converter.
Noise	The standard deviation of the concentration. The calculation is as follows: Take a concentration value once every two minutes. Store 25 of these samples in a first in, last out buffer. Every two minutes, calculate the standard deviation of the current 25 samples. This is a microprocessor-generated field and cannot be set by the user. This reading is only valid if zero air or a steady concentration of span gas has been supplied to the instrument for at least one hour.
Undiluted NO	Displays the actual reading on the analyser before the dilution ratio is applied. If the **Dilution Ratio** is 1 both **Undiluted NO** and **Diluted NO** field will be the same value.
Undiluted NOx	Displays the actual reading on the analyser before the dilution ratio is applied. If the **Dilution Ratio** is 1 both **Undiluted NOx** and **Diluted NOx** field will be the same value.
Undiluted NO2	Displays the actual reading on the analyser before the dilution ratio is applied. If the **Dilution Ratio** is 1 both **Undiluted NO_2** and **Diluted NO2** field will be the same value.
Dilution Ratio	Entering a value here will multiply the displayed and recorded measurements by the dilution amount. For example, if the instrument is measuring a source where the average concentration is above the upper limit of the measurement range, a dilution probe with a fixed dilution ratio can be used to reduce the level measured by the instrument, so for a 4:1 dilution ratio, enter a value of 4. Enter the ratio here so the instrument can display the correct value on the instrument. The default value is 1.00 (this indicates no dilution is applied).

Diluted NO	Displays the current reading on the analyser after the dilution ratio is applied. If the **Dilution Ratio** is 1 both **Undiluted NO** and **Diluted NO** field will be the same value.
Diluted NOx	Displays the current reading on the analyser after the dilution ratio is applied. If the **Dilution Ratio** is 1 both **Undiluted NOx** and **Diluted NOx** field will be the same value.
Diluted NO2	Displays the current reading on the analyser after the dilution ratio is applied. If the **Dilution Ratio** is 1 both **Undiluted NO2** and **Diluted NO2** field will be the same value.

3.4.21 Communications Menu

Main Menu → Communications Menu

Configures how the instrument communicates with external instrumentation and data loggers.

Figure 58 – Communications Menu Screen

Data Logging Menu	Refer to Section 3.4.22.
Serial Communication Menu	Refer to Section 3.4.23.
Analog Input Menu	Refer to Section 3.4.24.
Analog Output Menu	Refer to Section 3.4.25.
Digital Input Menu	Refer to Section 3.4.26.
Digital Output Menu	Refer to Section 3.4.27.
Network Menu [Optional]	Refer to Section 3.4.28.
Bluetooth Menu	Refer to Section 3.4.29.

3.4.22 Data Logging Menu

Main Menu → Communications Menu → Data Logging Menu

When editing the numeric or text menus, the "-" key will delete the current parameter and move the others up to take its place; the "+" key will insert a parameter at the current location and move the ones below it down. The internal logger can log a maximum of 12 parameters.

Figure 59 – Data Logging Menu Screen

Data Log Interval	Displays the interval at which the data is saved to the USB memory stick. Selecting a **1 sec** interval may result in occasional measurements not being logged or slow response to serial commands.
Cal. Log Interval	When enabled displays the interval at which the data is saved to the USB memory stick for the calibration time period. This occurs when the system is in **Cal. Mode SPAN** or **ZERO**. Selecting a **1 sec** interval may result in occasional measurements not being logged or slow response to serial commands. Seconds (**1**, **2**, **5**, **10**, **15**, **30**) or Minutes (**1**, **2**, **3**, **5**, **10**, **15, 20** or **30**) or hours (**1**, **2**, **4**, **6**, **8**, **12** or **24**). Default is **Disabled**.
Data Log Setup –Numeric	Numeric list of the parameters logged. This is a quicker way to enter parameters (for lists of parameters refer to Table 50).
Data Log Setup –Text	Select from a list of loggable parameters by name.

3.4.23 Serial Communication Menu

Main Menu → Communications Menu → Serial Communication Menu

Figure 60 – Serial Communication Menu Screen

Serial ID	This is the ID of the instrument when using multidrop RS232 communications. This ID can be changed to support multiple instruments on the same RS232 cable.
Bayern-Hessen ID **[Bayern-Hessen Protocol]**	This is the Bayern-Hessen ID used by the Bayern-Hessen protocol.
NO ID **[Bayern-Hessen Protocol]**	This is the ID of the NO gas used by the Bayern-Hessen protocol.
NOx ID **[Bayern-Hessen Protocol]**	This is the ID of the NO_X gas used by the Bayern-Hessen protocol.
NO2 ID **[Bayern-Hessen Protocol]**	This is the ID of the NO_2 gas used by the Bayern-Hessen protocol.
Service port (RS232 #1) **Multidrop port (RS232 #2)**	The port parameters below are repeated for each serial port.
Serial Delay	Some older communication systems require a delay before the instrument responds to a serial command. The number of milliseconds of delay required (0 - 1000). The default is 0, meaning the instrument responds as quickly as possible to any serial request.
Baudrate	Sets the baud rate for this serial port (**1200**, **2400**, **4800**, **9600**, **14400**, **19200**, **38400** or **115200**).
Parity	This controls the Parity of RS232 communication. This should be left at the default None, unless your system requires otherwise.
Protocol	Sets the protocol used for this serial port (**Advanced**, **ModBus**, **EC9800** or **Bayern-Hessen**). The protocol must be set to **Advanced** for Ecotech supplied software.
Endian **[Modbus Protocol]**	Select **Little** or **Big** endian mode for **ModBus** protocol.

3.4.24 Analog Input Menu

Main Menu → Communications Menu → Analog Input Menu

The Serinus supports three analog inputs from the analog & digital I/O port. Each input is a 0 - 5 volt CAT 1 input that can be scaled and logged to the USB memory stick or accessed remotely as parameters 199 - 201.

CAUTION

Exceeding these voltages can permanently damage the instrument and void the warranty.

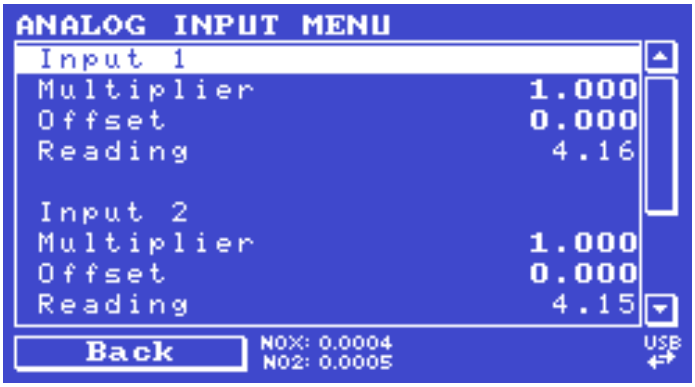

Figure 61 – Analog Input Menu Screen

Input 1/2/3	The sections below are repeated for each analog input.
Multiplier	The input voltage will be multiplied by this number. For example, if a sensor has a 0 - 5 V output for a temperature of -40 °C to 60 °C, the multiplier would be (60 - (-40))/5 = 20.
Offset	This value will be added to the above calculation. Continuing the example in the multiplier description, the offset should be set to -40, so that a voltage of 0 V will be recorded as -40 °C.
Reading	The current reading from the analog input, after applying the multiplier and offset. This is the value that is logged or reported as parameter 199 - 201 via USB or serial requests.

3.4.25 Analog Output Menu

Main Menu → Communications Menu → Analog Output Menu

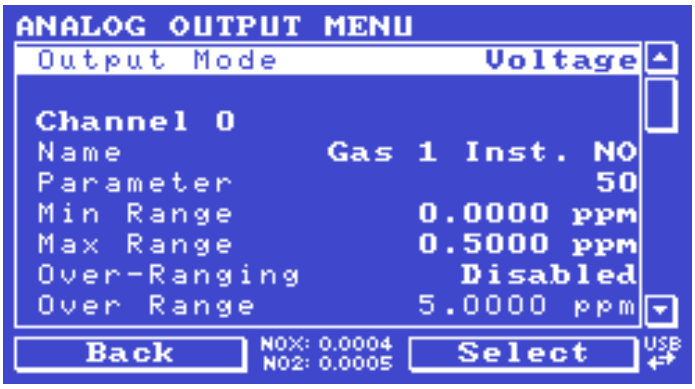

Figure 62 – Analog Output Menu Screen

Output Mode	The analog output can be set to be either **Current** or **Voltage**. Different fields will be displayed depending on which analog output type is selected.
Channel 0/1/2	Channel 0 as default will be setup to be Parameter 50, which is primary gas instantaneous reading. All three channels can be user defined to any of the available parameters (for a list of parameters refer to Table 50). All the labels below are repeated for each Channel.
Name	Text list of the parameter defined to output through the analog output (for a list of parameters refer to Table 50).
Parameter	Numeric list of the parameter defined to output through the analog output. This is a quicker way to enter parameters (for a list of parameters refer to Table 50).
Min Range	Set the lower range limit (in concentration units). This is the value at which the analog output should be at its minimum. For example, 4 mA for a 4 - 20 mA current output.
Max Range	Set the upper range limit (in concentration units). This value can be edited but cannot exceed the Over-Range value. This is the value at which the analog output should be at its maximum. For example, 20 mA for a current output.
Over-Ranging	Set to **Enabled** or **Disabled** to turn the over-ranging feature On or Off.
Over-Range	This field is only editable when **Over-Ranging** is set to **Enabled**. Set to the desired over range value. This value cannot be set below the Max Range value. This is the alternate scale the used for the analog output when over-ranging is active and enabled. When 90% of the standard range is reached, this over range is automatically entered. When 80% of the original range is reached, it returns to the original range.
Hold for Cal.	When **Enabled**, putting the instrument into any calibration state other than MEASURE will cause it to continue reporting the last reported value.

3.4.25.1 Analog Output Menu - Voltage

Main Menu → Communications Menu → Analog Output Menu

These items appear when **Output Mode** is set to **Voltage**.

Voltage Offset	Choices are **0 V**, **0.25 V** or **0.5 V**. This offsets the voltage for a concentration reading of 0. Since the output cannot go negative, this offset can be used to record negative readings.
0.5V Calibration	Enables the user to calibrate the analog voltage output at a low point. Edit the value against a reference volt meter until the connected equipment reads 0.5 V (refer to Section 4.4.1.1).
5.0V Calibration	Enables the user to calibrate the analog voltage output at a full scale point (5 V). Edit the value against a reference volt meter until the connected equipment reads 5 V (refer to Section 4.4.1.1).

3.4.25.2 Analog Output Menu - Current

Main Menu → Communications Menu → Analog Output Menu

These items appear when **Output Mode** is set to **Current**.

Current Range	Enables the user to set their desired current range. The user's choices are **0 - 20 mA**, **2 - 20 mA** or **4 - 20 mA**.
4mA Calibration	Enables the user to calibrate the current output at a low point. Edit the value against a reference amp meter until the connected equipment reads 4 mA (refer to Section 4.4.1.2).
20mA Calibration	Enables the user to calibrate the current output at a full scale point (20 mA). Edit the value against a reference amp meter until the connected equipment reads 20 mA (refer to Section 4.4.1.2).

3.4.26 Digital Input Menu

Main Menu → Communications Menu → Digital Input Menu

This menu is used to remotely trigger zero and span calibrations. This is done by assigning the eight digital inputs with one of the following commands.

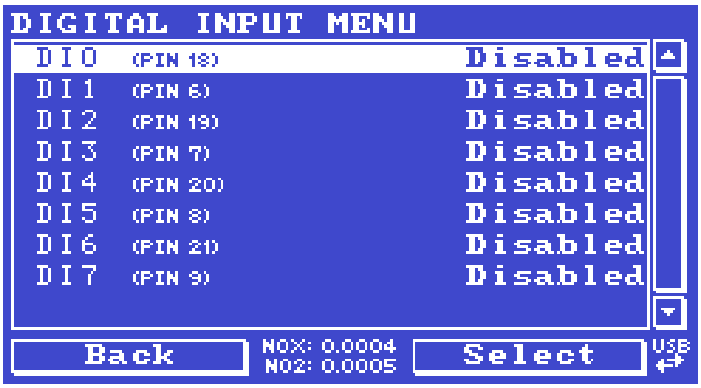

Figure 63 – Digital Input Menu Screen

DI N (Pin X)	Associates an action with a digital input. There are eight available digital inputs (the pin numbers are for the 25-pin connector). Each one can have one of the following associated actions, triggered when the corresponding digital input goes to the **Active** state: ▪ **Disabled:** No action (this digital input does nothing) the pin is forced to Active Low. ▪ **Do Span:** Used to perform a span check When activated the instrument sets the Cal. Mode to Span (refer to Section 3.4.10.1). ▪ **Do Zero:** Used to perform a zero When activated the instrument sets the Cal. Mode to Zero (refer to Section 3.4.10.1).
Active **[DO Span, Do Zero]**	Each pin can be set to be active **High** or **Low**. Active High means that the event will be triggered when the line is pulled to 5 V. Active Low means that the event will be triggered when the line is pulled to 0 V.

Example

Here is a typical configuration between an instrument and either a data logger or calibrator (master device):

1. Set the jumper JP1 to 5 V position (refer to Section 4.4.3).
2. Connect one of the master devices digital output signals to pin 18 and the ground signal to pin 5 of the instrument's analog/digital 25 pin female connector (refer to Figure 80).
3. Program master device to output 0 volts to pin 18 when a span is desired.
4. In the instrument's **Digital Input Menu** assign **DI 0 → Do Span** - Accept.
5. Set the Active state to Low
6. The same procedure can be followed to also activate zero calibrations. Pin 6 of the instrument's analog/digital 25 pin female connector can be connected to one of the other master devices digital outputs and the instrument can be set so **DI 1** is assigned to **Do Zero**.

3.4.27 Digital Output Menu

Main Menu → Communications Menu → Digital Output Menu

This allows the instrument to trigger external alarms in response to certain events. There are eight different pins available, which will be set to the active state during an associated event:

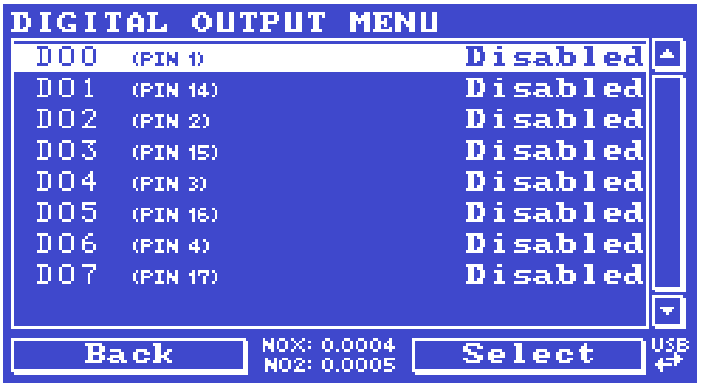

Figure 64 – Digital Output Menu Screen

DO N (Pin X)	Associates a state with a digital output. There are eight digital outputs (the pin numbers are for the 25 pin connector). Each one can have one of the associated states listed in Table 6. The pin will be driven to the active state while the instrument state is true.
Active **[DO Enabled]**	Each pin can be set to be active **High** or **Low**. Active High means that the pin will be pulled to 5 V when the associated event occurs. Active Low means the pin will be pulled to 0 V when the associated event occurs.

Table 6 – Digital Output States

Digital Output State	Description
Disabled	No state (this state is never **Active**).
High Volt. Fail	High voltage fault.
Pwr Supply Fail	Power supply fault.
Ref Volt. Fail	Reference voltage fault.
A2D Fail	Analog to digital fault.
Lamp Fail	Lamp fault. (Not applicable for Serinus 40)
Flow Fail	Sample flow fault.
Cell Heat Fail	Cell heater fault.
Conv. Heat Fail	Converter heater fault.
Manfld Heat Fail	Manifold heater fault.
Lamp Heat Fail	Lamp heater fault. (Not applicable for Serinus 40)
Chassis Tmp Fail	Chassis temperature fault.
Cooler Fail	Cooler temperature fault.
USB Disconnected	The USB memory stick is disconnected.
Background	Performing a background.
Span	Performing a span check.
Zero	Performing a zero check.
System Fault	Any system fault (the red light is ON).
Maintenance Mode	User has activated maintenance mode.
Over Range AO 0	Over range for the analog output when channel 0 is active.
Over Range AO 1	Over range for the analog output when channel 1 is active.
Over Range AO 2	Over range for the analog output when channel 2 is active.

3.4.28 Network Menu (Optional)

Main Menu → Communications Menu → Network Menu

Figure 65 – Network Menu Screen

The Network Menu only appears when the **Network Port** is enabled in the **Hardware Menu** (refer to Section 3.4.33). The **Network Menu** allows the user to view or set the IP Address, Netmask and Gateway if the optional network port is installed.

Start-up Mode	The following modes are available: ▪ **Normal**: In this mode nothing is done with the network port during boot-up. It is assumed to be configured correctly or unused. ▪ **Read IP**: This mode interrogates the network port for its IP address. The menu will display the network address after boot-up. ▪ **Set IP**: The user may enter an IP address, Netmask and Gateway address (following the usual rules for formatting these addresses). At this time the instrument does not validate the correctness of these entries. When you cycle power, the instrument will first instruct the network port on its new address. It will switch to Read IP mode and read back the address it just set so the user may verify it in the menu. ▪ **Set DHCP**: This sets the network port into DHCP mode, allowing the network to assign the instrument an IP address.
IP Address **[Read IP or Set IP Start-up Mode]**	This is the current IP address of the instrument.
Netmask **[Read IP or Set IP Start-up Mode]**	This is the subnet mask of the network the instrument is connected to.
Gateway **[Read IP or Set IP Start-up Mode]**	This is the IP address of the router to access addresses not on the same subnet.
ID **[Set DHCP Start-up Mode]**	This is the ID of the instrument. Use the keypad to edit this field. The default ID setting is **Serinus**(**Ecotech ID**).

	The word **Serinus** is always the first part of the name and cannot be edited. The second part is the **Ecotech ID**.
Adaptor is in DHCP mode **[Set DHCP Start-up Mode]**	In this mode the instrument will ask for its network parameters from a DHCP server on your network.
Protocol	Sets the protocol used for the network port (Advanced, ModBus, EC9800 or Bayern-Hessen). This must be set to Advanced for Ecotech supplied software.
Endian **[Modbus Protocol]**	Select Little or Big endian mode for ModBus protocol.
Bayern-Hessen ID **[Bayern-Hessen Protocol]**	This is the Bayern-Hessen ID used by the Bayern-Hessen protocol.
NO ID **[Bayern-Hessen Protocol]**	This is the ID of the NO gas used by the Bayern-Hessen protocol.
NOx ID **[Bayern-Hessen Protocol]**	This is the ID of the NO_X gas used by the Bayern-Hessen protocol.
NO2 ID **[Bayern-Hessen Protocol]**	This is the ID of the NO_2 gas used by the Bayern-Hessen protocol.

To read the IP address, refer to Section 4.3.1.

To set the IP address, refer to Section 4.3.2.

3.4.29 Bluetooth Menu

Main Menu → Communications Menu → Bluetooth Menu

This instrument supports Bluetooth communication through the Serinus Remote Android Application (refer to Section 4.7).

Figure 66 – Bluetooth Menu Screen

Bluetooth	This field indicates whether the instrument is remotely connected to an Android device.
Reset	After changing the ID or PIN, it is necessary to reboot the Bluetooth module. This is done by resetting the instrument or by using this menu item to reboot only the Bluetooth.

ID	This is the Bluetooth ID of the instrument. Use the keypad to edit this field. The default ID setting is **Serinus(Ecotech ID)**. The word **Serinus** is always the first part of the name and cannot be edited. The second part is the **Ecotech ID**.

3.4.30 Trend Display Menu

Main Menu → Trend Display Menu

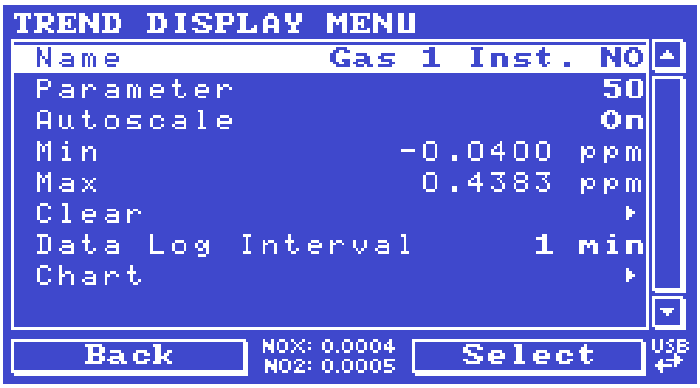

Figure 67 – Trend Display Menu Screen

Name	Displays the name of the **Parameter** the user has selected.
Parameter	Allows the user to select any loggable (refer to Table 50) parameter to graph on the trend display.
Autoscale	**Autoscale** can be **ON** or **OFF**. When it is "**ON**" the parameter will be scaled automatically for user convenience based on the current values logged.
Min	This is the minimum scale of the chart as defined by the **Autoscale** or the user.
Max	This is the maximum scale of the chart as defined by the **Autoscale** or the user.
Clear	Clears the current data points in the Chart.
Data Log Interval	The data log interval can be user set from **1 sec** interval up to **24 hours**.
Chart	This field enters a screen with a graph of the user selected **Parameter** (refer to Section 3.4.31).

3.4.31 Chart

Main Menu → Trend Display Menu → Chart

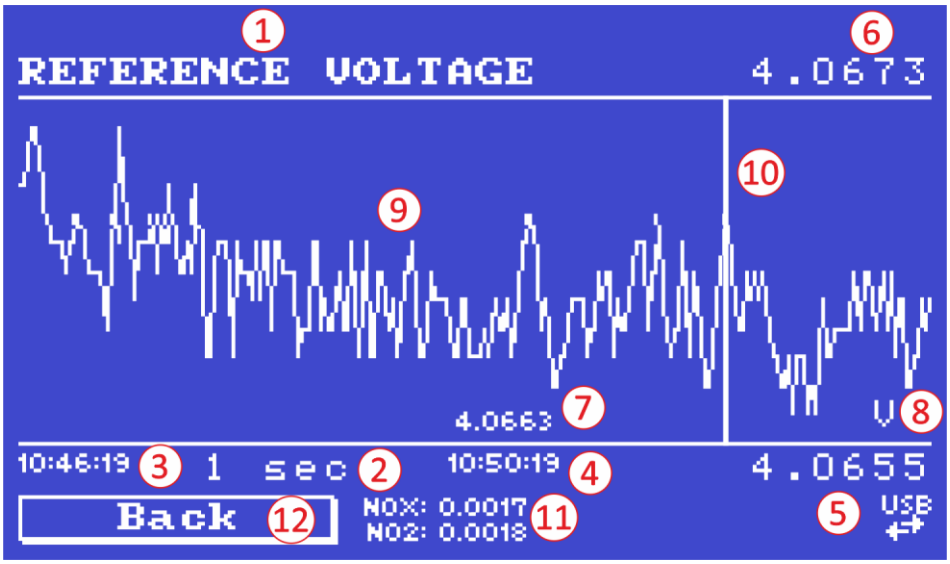

Figure 68 – Chart Screen

The chart allows the user to select a parameter and view it in a real time chart. The user can select from any loggable parameter (refer to Table 50). Changing the logged parameter will reset the chart. Pressing the Up or Down buttons will change between the selected parameter and the instantaneous NO, NO_x and NO_2 gas value. Changing the Data Log Interval resets all charts.

Chart Title (1)

Displays the name of the parameter as it would be displayed on the advanced protocol parameter list.

Data Log Interval (2)

Displays the value of the data logging interval as determined by the user in the Trend Display Menu (refer to Section 3.4.30).

Chart X-Axis (3 & 4)

(3) Displays the time stamp for the oldest data point (left hand side).

(4) Displays the time stamp for the newest data point (right hand side) or if the cursor is active, it displays the current cursor data point time stamp.

Chart Y-Axis (5 & 6)

(5) This is the minimum scale as defined by the autoscale or the user (refer to Section 3.4.30).

(6) This is the maximum scale as defined by the autoscale or the user (refer to Section 3.4.30).

Current Data Point Value (7)

Displays the current value of the newest data point unless the **cursor** is active then is displays the current cursor data point value.

Units (8)

Displays the units of measure for the parameter that the user has selected.

Data Points (9)

Displays the last 240 data points recorded for the selected parameter.

Chart Cursor (10)

If the user wishes to know the value at any at a particular data point on the chart, the cursor can be used. The cursor is activated by pressing the (-) key on the keypad and is represented by a vertical line on the chart. The cursor can be moved left or right by the (-) or (+) key respectively. This cursor location now represents the current data point value of interest. The cursor will stay with the chosen data point and move with the updating chart. When the cursor finally hits the end of the chart it deactivates and the current data point value will now be the latest data point entering the chart.

Mode (11)

This field indicates the NO_x and NO_2 concentration being measured in real-time.

Back (12)

Pressing back allows the user to access other menu items while the chart is still logging in the background.

Digital Output State	Description
Left Selection Button	Returns the user back to the trend display menu.
Scrolling Buttons	Using the scrolling buttons will cycle through the user selected parameter as well as any default gas(es) currently logging.
- Button	Pressing the (-) button will bring up the cursor and move it to the left.
+ Button	Pressing the (+) button will move the cursor to the right. When the cursor moves all the way to the right due to the chart moving it will deactivate.

3.4.32 Advanced Menu

This menu is accessed via a different method than the other menus. From the **Home Screen** press the following keys: **(.)99(**+SPACE**)**

This menu contains technical settings, diagnostics and factory hardware installations. No items in this menu should be accessed without authorisation and supervision of qualified service personnel.

Figure 69 – Advanced Menu Screen

Language	Select a language.
Hardware Menu	Refer to Section 3.4.33.
Service Displays	When set to **On**, new items appear on many different menus. These fields are for diagnostic and service personnel only. Default is **Off**.
Next Service Due	Enables the user to edit the next service due date.
Jump to Next State	Moves the sequence to the next state (e.g. from Fill to Measure). This command is most commonly used to force an instrument out of the warm-up sequence early.
Parameter Display Menu	Refer to Section 3.4.34.
Reset to Factory Defaults	Reset the configuration to factory defaults. This will erase all calibrations and user configuration information.
Rebuild Index	If a data log becomes corrupted it may be possible to restore It by rebuilding its index file. This command will ask the user to specify a month and will rebuild the index for that month. This operation can take many minutes and it should not be interrupted. While the file is rebuilding any data logging will be suspended.

CAUTION

No items in this menu should be accessed without authorization and supervision of qualified service personnel.

3.4.33 Hardware Menu

Advanced Menu → Hardware Menu

This menu contains factory hardware installations. If the user reset to factory defaults, then they may need to revisit this menu to enable their installed optional features.

Figure 70 – Hardware Menu Screen

Model	Select the instrument model. Normally this only needs to be reset when the configuration is corrupted. The selections available will depend on licensing. It is not recommended to run an instrument with firmware set to an incorrect model.
Front Panel Style	Choosing the incorrect front panel will result in the traffic lights behaving inconsistently. Default is **Aluminium**.
Network Port	When **Enabled** indicates the instrument has a network port installed. Default is **Disabled**.
Orifice Size **[Internal Pump Option Disabled]**	Specify the input orifice for instruments without an internal pump. Default is **0.64** for **Standard** range instruments and **0.16** for **High** range instruments.
Internal Pump	When **Enabled** indicates the instrument has an Internal pump installed. Default is **Disabled**.
Optical Test Lamp	When **Enabled** gives access to the optical diagnostic tests. Default is **Disabled**.
IZS Internal Span	When **Enabled** indicates the IZS option is installed.
Perm Rate **[IZS internal Span Enabled]**	User should enter the value as found on the permeation tube specification sheet.
Perm Flow **[IZS internal Span Enabled]**	Total flow past the permeation chamber during an activated internal span mode.
Perm Tube Oven **[IZS internal Span Enabled]**	Set target temperature for the permeation oven. User definable range from 47 °C - 53 °C. Default is 50 °C.
HV Target	Set target voltage for the high voltage power supply. User definable range from 400 - 800 V. Default is 650 V.

3.4.34 Parameter Display Menu

Main Menu → Advanced Menu → Parameter Display Menu

Used to display a parameter in real-time on the screen (refer to Table 50 for a full list of parameters).

Figure 71 – Parameter Display Menu Screen

Data Parameter	This is an editable field. Enter the parameter number the user wishes to view (refer to Table 50).
Name	Displays the name of the selected parameter.
Value	Displays the current value of the selected parameter.

This page is intentionally blank.

4. Communications

The Serinus has a number of different interfaces for communication with other equipment (RS232, USB, 25 pin digital/analog input/output, TCP/IP network (optional) and Bluetooth). A demonstration version of Ecotech's **Airodis** software is included with the instrument, enabling basic data downloads and remote operation from a PC running a supported MS Windows operating system. The full version of Airodis is available separately and includes automated data collection, data validation and complex reporting by multiple users. Refer to the **Airodis Manual** and Section 4.6 of this manual for details on setting up and communicating with the instrument.

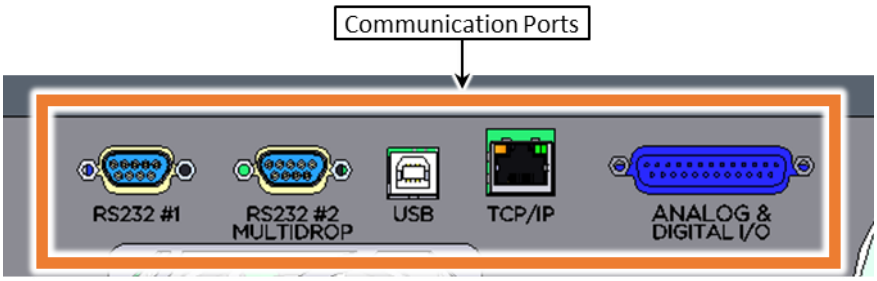

Figure 72 – Communication Ports

4.1 RS232 Communication

RS232 communication is a very reliable way to access data from the instrument and is recommended for use in connection to a data logger for 24/7 communication. Both RS232 ports are configured as DCE and can be connected to DTE (Data Terminal Equipment such as a data logger or computer).

Port #2 also supports a multidrop arrangement (a configuration of multiple instruments connected via the same RS232 cable where the transmit signal is only asserted by the instrument that is spoken to).

For reliable multidrop RS232 communications follow these guidelines:

- Verify that the Serial ID is set to a unique value which is different to the other instruments in the chain (refer to Section 3.4.23).
- All of the instruments in the multidrop chain must have the same baud rate and communication protocol settings. A maximum of 9600 baud rate is recommended.
- The multidrop RS232 cable should be kept to less than three meters in length.
- A 12K ohm terminating resistor should be placed on the last connector of the cable (connect from pin 2 to pin 5 and from pin 3 to pin 5 – refer to Figure 73).
- The shielding of the multidrop cable must be continuous throughout the cable.
- The shielding of the multidrop cable must only be terminated at one end. It should be connected to the metal shell of the DB 9 way connector.

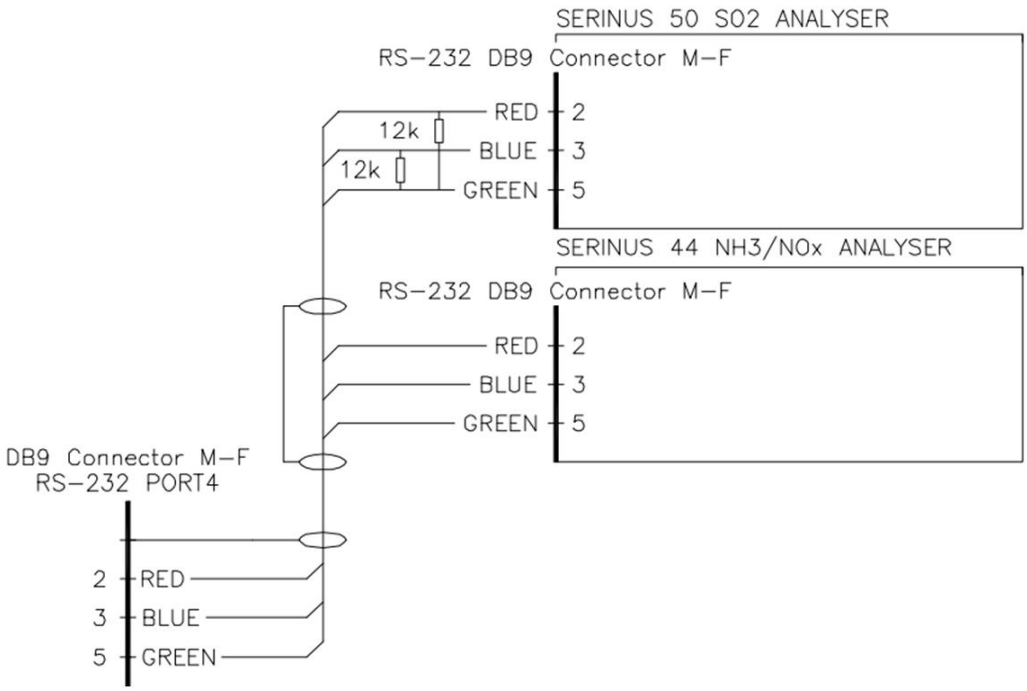

Figure 73 – Multidrop RS232 Cable Example

4.2 USB Communication

This is ideal for irregular connection to a laptop running Ecotech's Airodis software to download logged data and remotely control the instrument. Due to the nature of USB, this is a less reliable permanent connection as external electrical noise can cause USB disconnection errors on a data logger.

For more information regarding connecting over USB, refer to Section 4.6.1.1.

Note: Only the Advanced protocol is supported for USB communication.

4.3 TCP/IP Network Communication (Optional)

Instruments with the optional network port installed can be accessed using a TCP/IP connection. Figure 74 shows examples of some possible configurations for remote access.

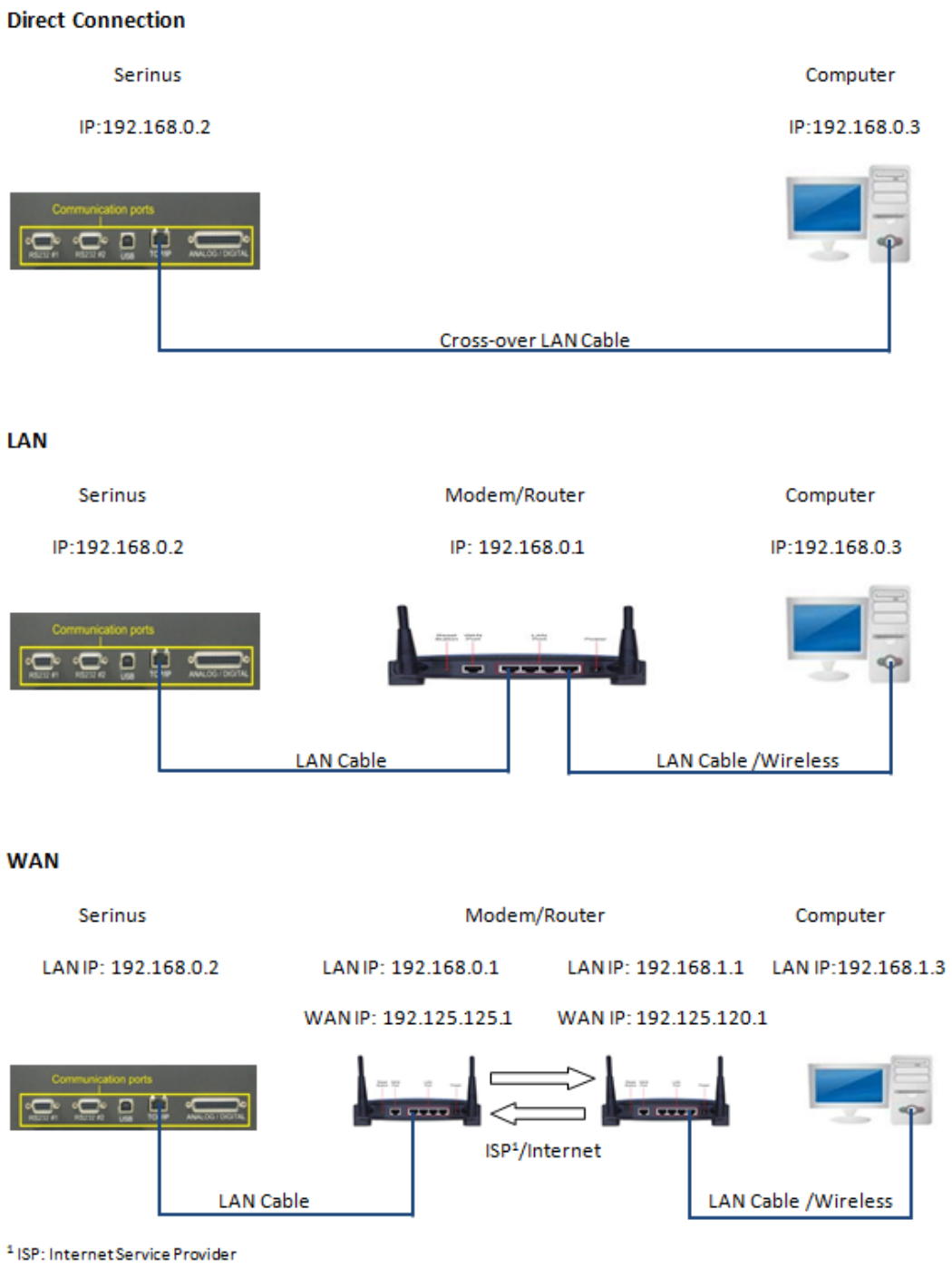

Figure 74 – Example of Typical Network Setups

Note: In Figure 12 all the IP addresses are taken as an example. The WAN IP addresses are normally provided by your ISP. Whereas, the LAN IP addresses can be set manually to any range which is within the subnet of the Modem/Router/Switch.

Use a cross-over LAN cable to connect the instrument directly to a computer, or a standard LAN cable for connection to a Modem/Router/Switch as shown in Figure 74. The computer could be connected to the Modem/Router using either CAT5 cable or a wireless connection, but the instrument must be connected using CAT5/6 cable.

4.3.1 Reading Network Port Setup

To read the current network port settings perform the following steps:

Procedure

1. Open - Main **Menu → Communications Menu → Network Menu**.
2. Select - **Start-up Mode → Read IP** - Accept.
3. Manually use the power switch on the rear of the instrument to turn the power OFF. Leave the instrument OFF for 10 seconds before turning the power back ON.
4. Open - Main **Menu → Communications Menu → Network Menu**.
5. The current network port settings will now be displayed on the screen.
6. When viewing is complete select - **Start-up Mode → Normal** - Accept.

4.3.2 Setting Network Port Setup

Below is an example of how to setup the network port:

Procedure

1. Open - **Main Menu → Communications Menu → Network Menu**.
2. Select - **Start-up Mode → Set IP** - Accept.
3. Edit - **IP Address** - (Change the IP address to the address the user wishes to use within the Modem/Router/Switch Subnet).
4. Edit - **Netmask** - (Change the Netmask to the setup specified by the Modem/Router).
5. Edit - **Gateway** - (Change the Gateway to the setup specified by the Modem/Router).
6. Select - **Protocol → Advanced** - Accept.

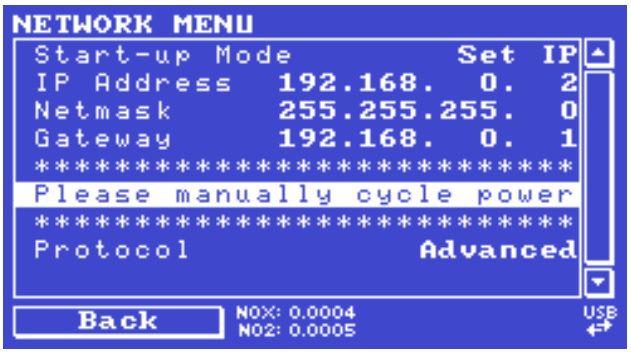

Figure 75 – Example of Network Menu Setup

7. Once completed, use the power switch on the rear of the instrument to turn the power OFF. Leave the instrument OFF for 10 seconds before turning the power back ON.

Note: Manually perform a hardware power cycle every time the IP address is changed for it to take effect.

8. Open - Main **Menu → Communications Menu → Network Menu**.
9. The **Start-up Mode** automatically changes to **Read IP** and the current network port settings will be displayed on the screen.
10. When viewing is complete select - **Start-up Mode → Normal** - Accept.

4.3.3 Port Forwarding on Remote Modem/Router Setup

When using the network port to connect to the modem/router with NAT enabled, the user will need to add IP mapping to ensure that data is forwarded through to the desired port. This is known as port forwarding. To set-up the port for the instrument, the user needs to go into the modem/router configuration. Normally, the user will see the port forwarding setup under **Port Forwarding**, **NAT** or **Port Mapping** menu. Below is an example port forwarding setup.

The default port for the Serinus range of instruments is **32783**. The destination address is the instrument IP address setup in the **Network Menu**.

Item	Protocol	Incoming Address	Incoming Port	Destination Address	Destination Port
1	tcp	0.0.0.0	32783 - 32783	192.168.0.2	32783 - 32783

Figure 76 – Port Forwarding Example

4.3.4 Setup Airodis to Communicate with Serinus

LAN

Below is an example of Airodis setup for a LAN network. Ensure the IP address is set to the same as on the instrument **Network Menu**.

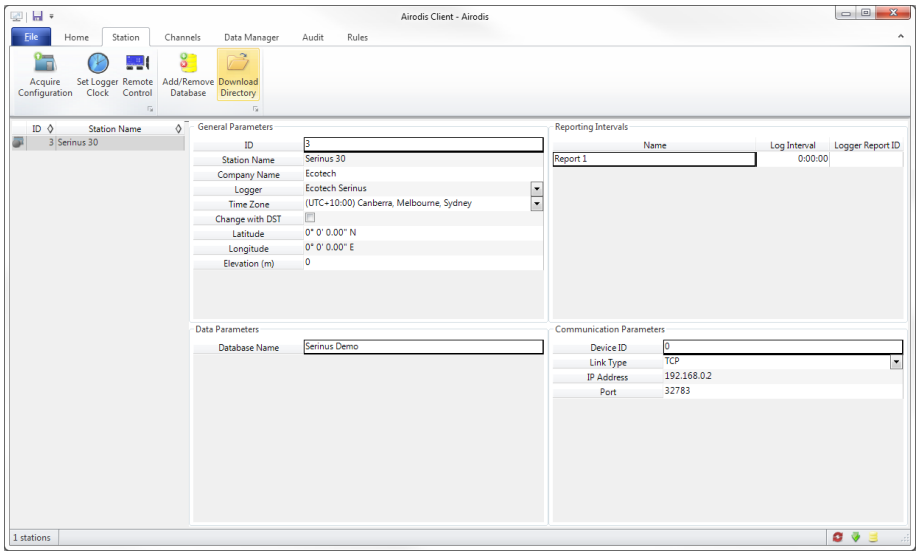

Figure 77 – LAN Network Set-Up (Airodis)

WAN

Below is an example of Airodis setup for a WAN network. Ensure the IP address is set the same as on the remote modem/router.

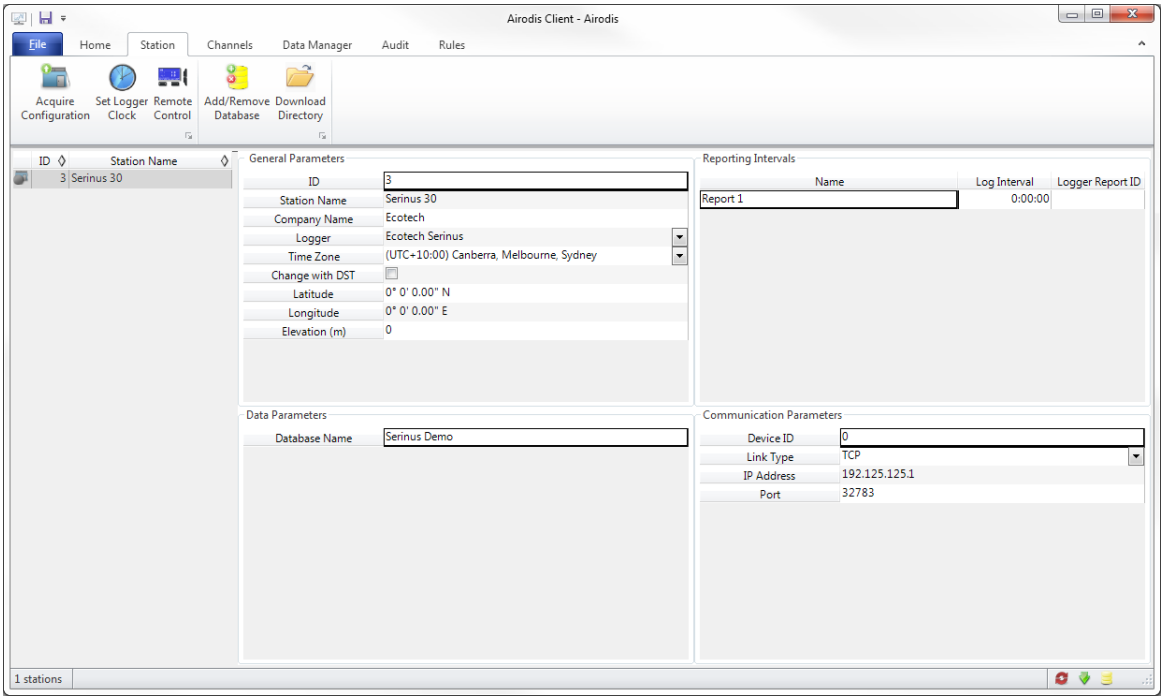

Figure 78 – WAN Network Set-Up (Airodis)

4.4 Analog and Digital Communication

The 25 Pin analog and digital I/O port on the rear panel of the instrument sends and receives analog and digital signals to other devices. These signals are commonly used to activate gas calibrators or for warning alarms.

4.4.1 Analog Outputs

The instrument is equipped with three analog outputs that can be set to provide either voltage (0 - 5, 0.25 - 5 or 0.5 - 5 V) or current (0 - 20, 2 - 20 or 4 - 20 mA) output. The analog outputs are tied to user selected parameters (refer to Table 50).

For 0 - 10 V analog output operation, set the output mode to current and move the jumpers (JP3) on the rear panel PCA to 0 - 10 V (refer to Figure 79). Ensure the Current Range is set to 0 - 20 mA to obtain the 0 - 10 V range. When calibrating the (current) analog output with the jumper set to 0 - 10 V, the 4 mA calibration target is now a 2 V target and 20 mA calibration target is now a 10 V target.

4.4.1.1 Analog Outputs Voltage Calibration

Equipment Required

- Multimeter (set to volts)
- Male 25 pin connector with cable

Procedure

1. Open - **Main Menu → Communications Menu → Analog Output Menu** (refer to Section 3.4.25).
2. Select - **Output Mode → Voltage**.
3. Connect a multimeter (using an appropriate adaptor or probes on the multimeter) to the ground (pin 24) and the relevant output pin (pin 10 = NO) (Pin 23 = NO_X) (pin 11 = NO_2).
4. Edit - **0.5V Calibration** - (until the multimeter reads 0.500 V ± 0.002) - Accept.
5. Edit - **5.0V Calibration** - (until the multimeter reads 5.000 V ± 0.002) - Accept.

4.4.1.2 Analog Outputs Current Calibration

Equipment Required

- Multimeter (set to mA)
- Male 25 pin connector with cable

Procedure

1. Open - **Main Menu → Communications Menu → Analog Output Menu** (refer to Section 3.4.25).
2. Select - **Output Mode → Current**.
3. Connect a multimeter (using an appropriate adaptor or probes on the multimeter) to the ground (pin 24) and the relevant output pin (pin 10 = NO) (Pin 23 = NO_X) (pin 11 = NO_2).
4. Edit - **4mA Calibration** - (until the multimeter reads 4 mA ± 0.01) - Accept.
5. Edit - **20mA Calibration** - (until the multimeter reads 20 mA ± 0.01) - Accept.

4.4.2 Analog Inputs

The instrument is also equipped with three analog inputs with resolution of 15 bits plus polarity, accepting a voltage between 0 - 5 V. These go directly to the microprocessor and should be protected to ensure static/high voltage does damage the main controller PCA (instrument warranty does not cover damage from external inputs).

4.4.3 Digital Status Inputs

The instrument is equipped with eight logic level inputs for the external control of the instrument such as Zero or Span sequences. Each input has a terminating resistor which can be either PULL UP or PULL DOWN. This is set using the jumper JP1 on the rear panel PCA (refer to Figure 79).

4.4.4 Digital Status Outputs

The instrument is equipped with eight open collector outputs which will convey instrument status condition warning alarms such as no flow, sample mode, etc. Two of the digital outputs can be set so that there is +5 V and +12 V available on the 25 pin connector for control purposes, instead of digital outputs 0 and 1.

In the default jumper locations (refer to Figure 79) these two outputs will function normally as open collector outputs. If moved to the position closer to the 25 pin connector then the DO 0 will supply +12 V and DO 1 will supply +5 V.

The +12 V and +5 V supplies are limited to about 100 mA each.

Each digital output is limited to a maximum of 400 mA. The total combined currents should not exceed 2 A.

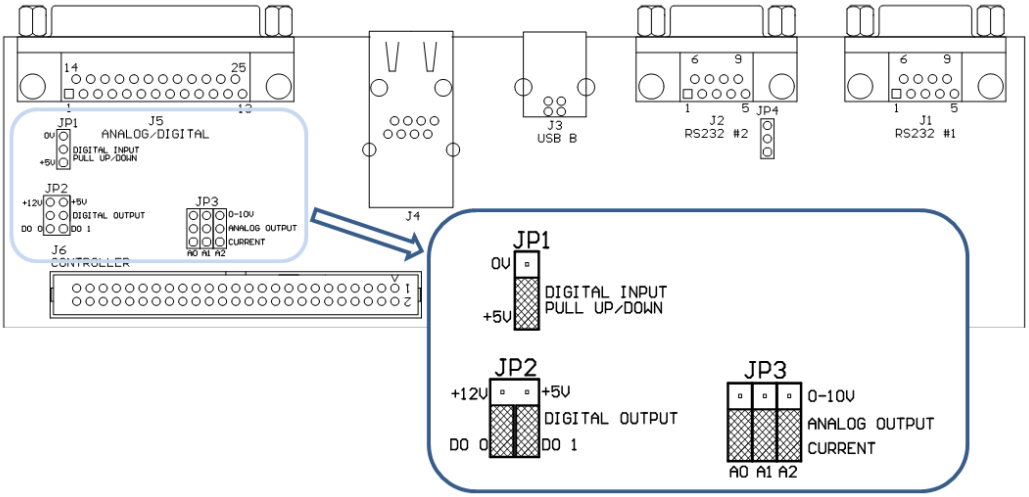

Figure 79 – Rear Panel PCA (Default Jumpers Highlighted)

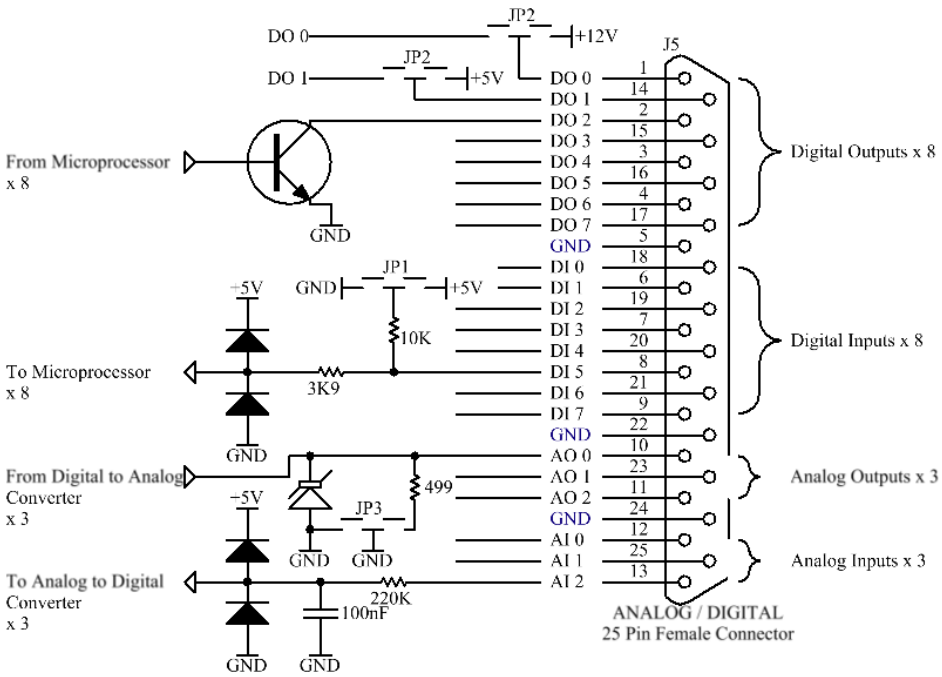

Figure 80 – Analog & Digital I/O Individual Pin Descriptions

CAUTION

The analog and digital inputs and outputs are rated to CAT I.

Exceeding 12 VDC or drawing greater than 400 mA on a single output or a total greater than 2 A across the eight outputs can permanently damage the instrument and void the warranty.

4.5 Logging Data

When the user receives the instrument from the factory it will have a default set of parameters already setup in the internal data logger. These select few parameters have been chosen for their relevance in assisting in troubleshooting the instrument.

4.5.1 Configure Instrument Internal Logging

In order to log data the user must first specify a data logging interval. This is how often data will be logged to the USB memory stick. It is possible to log a maximum of 12 parameters. These parameters can be selected by name or by parameter number using the parameter list as a reference (refer to Table 50).

4.5.1.1 Data Log Setup –Numeric

Procedure

1. Open - **Main Menu → Communications Menu → Data Logging Menu** (refer to Section 3.4.22).
2. Select - **Data Log Interval** - (adjust to the desired value) - Accept.
3. Open - **Data Log Setup –Numeric** - (select the storage location to edit).
4. Edit - (Change the value in the selected storage location "Parameter n" to the preferred parameter to be logged) - Accept

4.5.1.2 Data Log –Text

Procedure

1. Open - **Main Menu → Communications Menu → Data Logging Menu** (refer to Section 3.4.22).
2. Select - **Data Log Interval** - (adjust to the desired value) - Accept.
3. Open - **Data Log Setup –Text** - (select the storage location).
4. Select - (Change the name in the selected storage location "Parameter n" to the preferred parameter to be logged) -Accept.

4.6 Using Airodis Software to Download Data

4.6.1 Connecting the Instrument to a PC

The instrument can communicate with a PC using RS-232 (Serial), TCP/IP (Network), Bluetooth or USB. Serial, Bluetooth and network communications do not require additional drivers. When using a USB connection, the driver must be installed first.

4.6.1.1 Connecting Over USB

Before connecting the USB cable form a PC to the instrument, the Serinus USB driver must be installed.

Power ON the instrument and connect it to a PC with a USB cable. The user should receive a prompt if the driver needs to be installed. If not, open Device Manager (Under "System" in Control Panel), find the device and select "Update Driver Software".

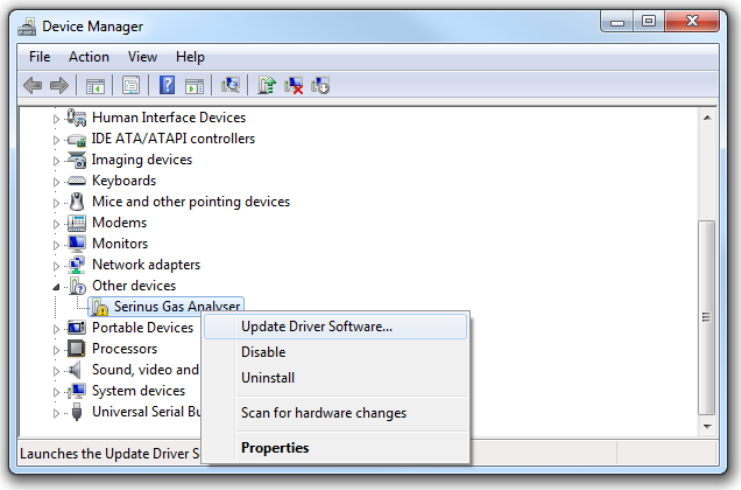

Figure 81 – Installing Driver Software (Device Manager)

When prompted where to search for the driver, select "**Browse my computer for driver software**".

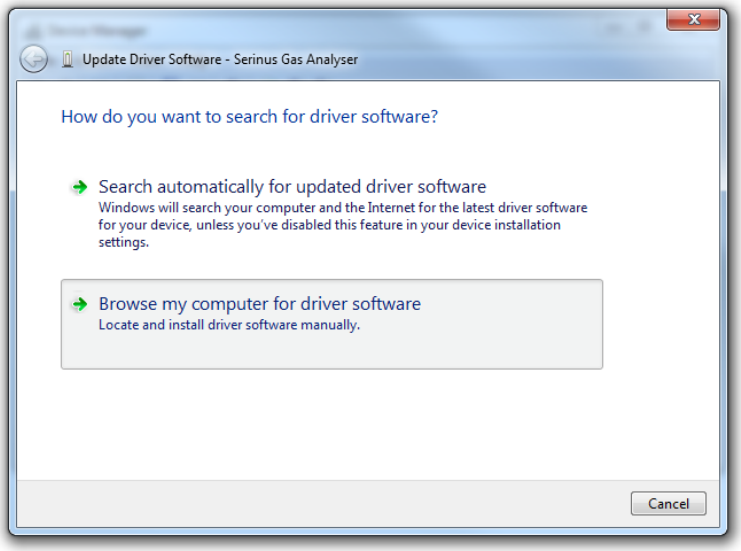

Figure 82 – Update Driver Popup

The Serinus USB driver is located on the green Ecotech resources USB stick under "\Drivers\Ecotech Analyser". Select this directory and click **Next**.

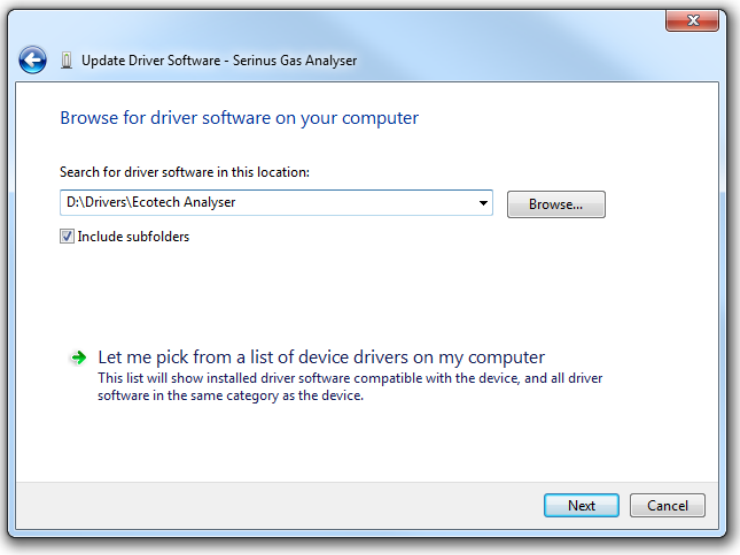

Figure 83 – Update Driver Popup (Directory Location)

If the user receives a confirmation prompt to install the driver, select **Install**.

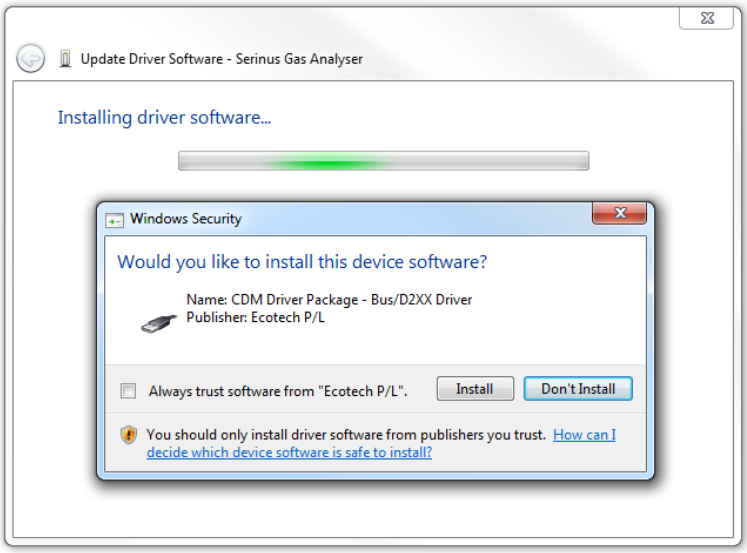

Figure 84 – Installing Driver Confirmation Prompt

If everything went smoothly, Windows will inform the user that the driver was successfully installed.

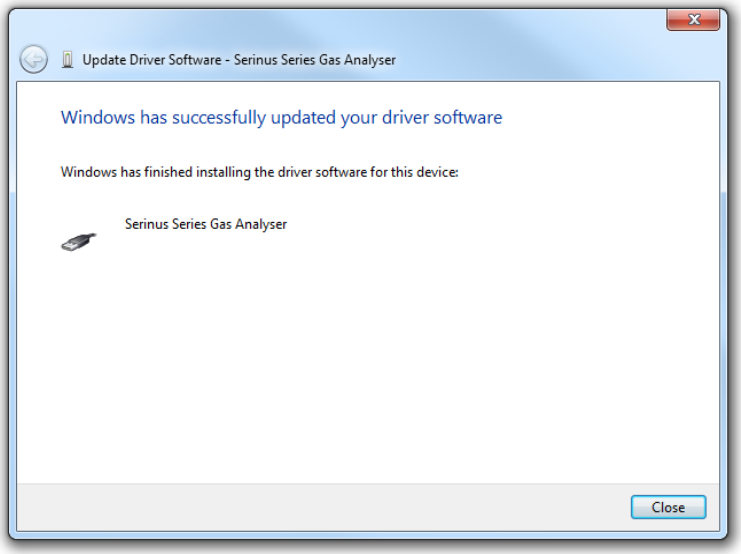

Figure 85 – Successful Driver Installation

4.6.1.2 Connecting Over Serial (RS-232)

The following steps outline how to setup the instrument for connection to a PC or datalogger (refer to Section 3.4.23).

Procedure

1. Open - **Main Menu → Communication Menu → Serial Communication Menu**.
2. Determine which RS232 Port the user is physically making the connection with. Remember, multidrop is only supported on RS232 #2.
3. Select - **Baudrate → 38400** - Accept (Set an appropriate baud rate, default is 38400).
4. Select - **Protocol → Advanced** - Accept.

If the user is running Airodis in a multidrop configuration, ensure that the **Serial ID** is unique for each instrument on the chain.

4.6.1.3 Connecting Over Network (TCP/IP)

Refer to Section 4.3.2 to setup the instrument for connection to a PC or datalogger using a static IP address.

4.6.2 Installing Airodis

The user can download data from the instrument using either a full retail (paid) version of Airodis or with the demo version which is included on the green Ecotech resources USB stick. The demo version has limited functionality, but will allow the user to download and export data from up to three instruments. If the user doesn't have Airodis Installed, they can obtain it from the following address:

http://www.airodis.com.au

The installer is straightforward: Ensure the user selects the correct version of software to install for their operating system. If they are running 64-bit windows, install the 64-bit (x64) version. Otherwise, install the 32-bit (x86) version.

4.6.3 Configuring Airodis

1. Once installed, double click on the Airodis shortcut on the desktop to start Airodis Workspace Manager. The user will be presented with the default workspace options. These will suffice for downloading data from the instrument.

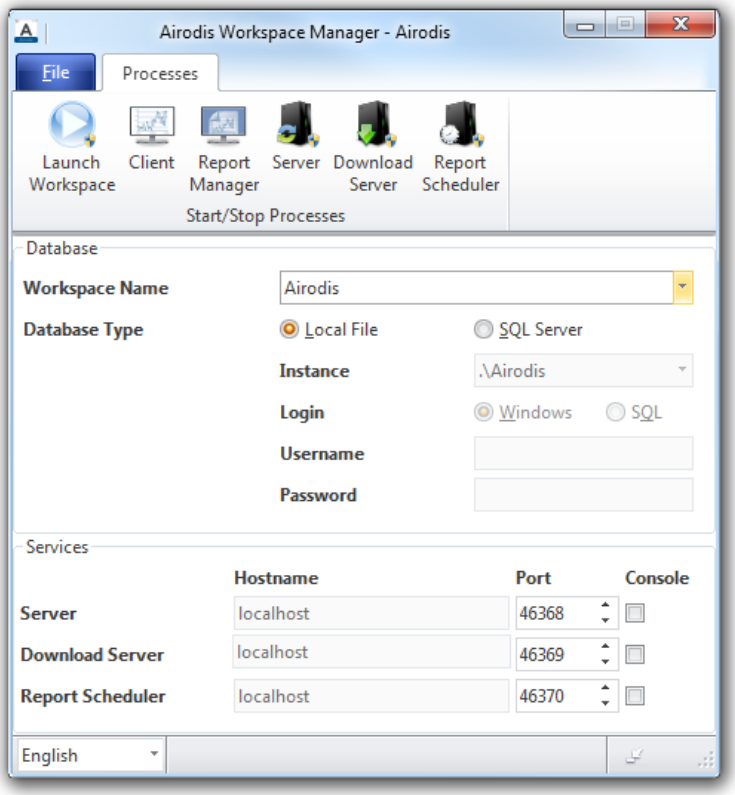

Figure 86 – Airodis Workspace Manager

2. Start the Client, Server and Download Server by single-clicking the toggle button for each. The client may prompt to register with Ecotech or install an update. Follow the prompts if it does.
3. Once the Client application has loaded, click **Home→Add Station→New Physical Station.**

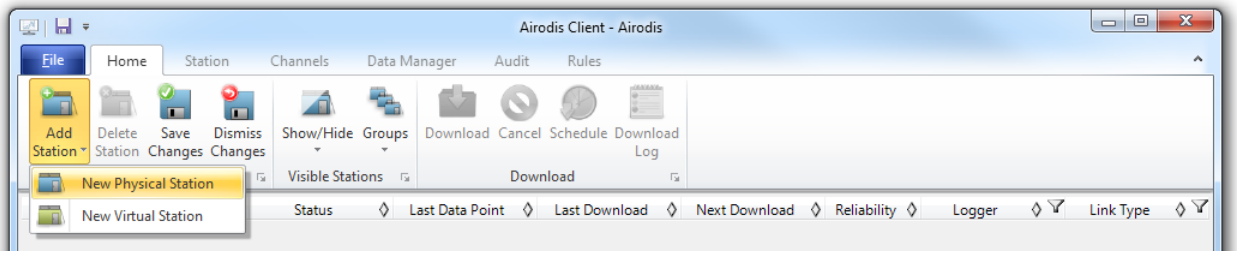

Figure 87 – Adding a New Station

4. This automatically brings the user to the **Station** tab on the ribbon. Enter the communication details to connect to the instrument.

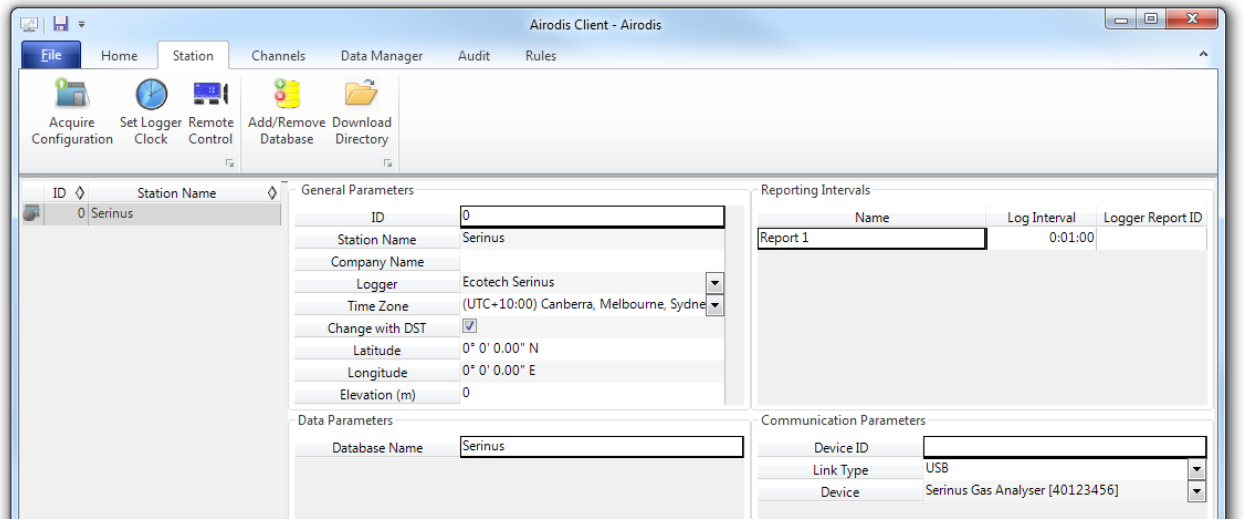

Figure 88 – New Station Connection

Table 7 – New Station Setup

Property	Description
Station Name	The name of the station. If the user has other loggers, the name is used to distinguish them.
Logger	Set this to “Ecotech Serinus” when downloading from any Serinus series instrument. This will communicate with the instrument on the **Advanced** protocol. If using a network or serial connection, ensure that the Advanced protocol has also been selected on the instrument itself.
Time Zone	Set this to the time zone that the instrument is located in.
DST	Enable this option if the user plan on changing the clock on the instrument with daylight savings. Leave this disabled if the clock does not shift during DST. The instrument will need to be adjusted manually for DST – it will not happen automatically.
Database Name	This is the name to be used for the table in the SQL database containing this station’s data. It must be unique for each station.
Device ID	Enter the Serial ID of the instrument. If the user is not using multidrop; this can be set to “0” or left blank.
Link Type	Select the type of connection used to connect to the instrument. Different properties will appear depending on the link type selected. Make these align with t with those of the instrument.
Log Interval	This needs to be the same as the **Data Log Interval** setting on the instrument.

Note: The available fields for communication parameters will change when the user change the link type. The user will need to set the communication parameters that have been defined on the instrument.

5. Once the station has been created, save the station by clicking the Save shortcut icon or **File→Save.**
6. Click Acquire Configuration. This will probe the instrument for a channel list. After a few seconds, the channel list should be visible in the **Channels** tab.

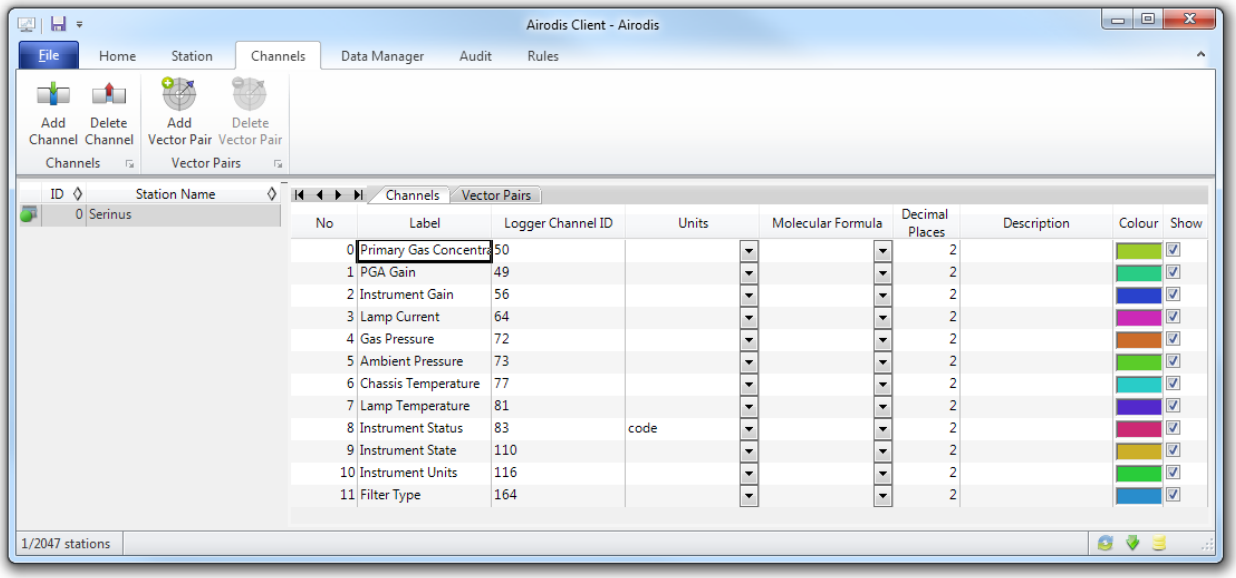

Figure 89 – Station Configuration (Channel List)

Note: If there was an error connecting to the instrument, a red dot will appear next to the station name in the station list (on the far left hand side). Hovering over the red dot will present the user with an error message (refer to Figure 90).

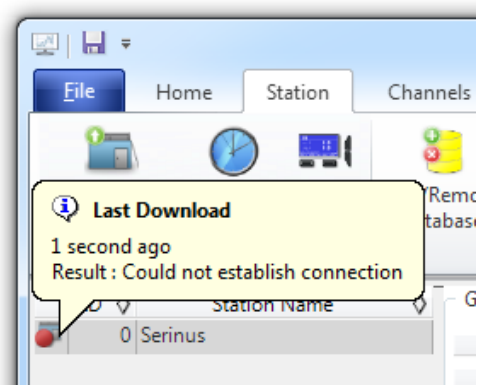

Figure 90 – Error Status Notification

7. Select the Data Manager tab, click download. The Download Data window will appear. Select the appropriate time period that the user wishes to download and click Download.

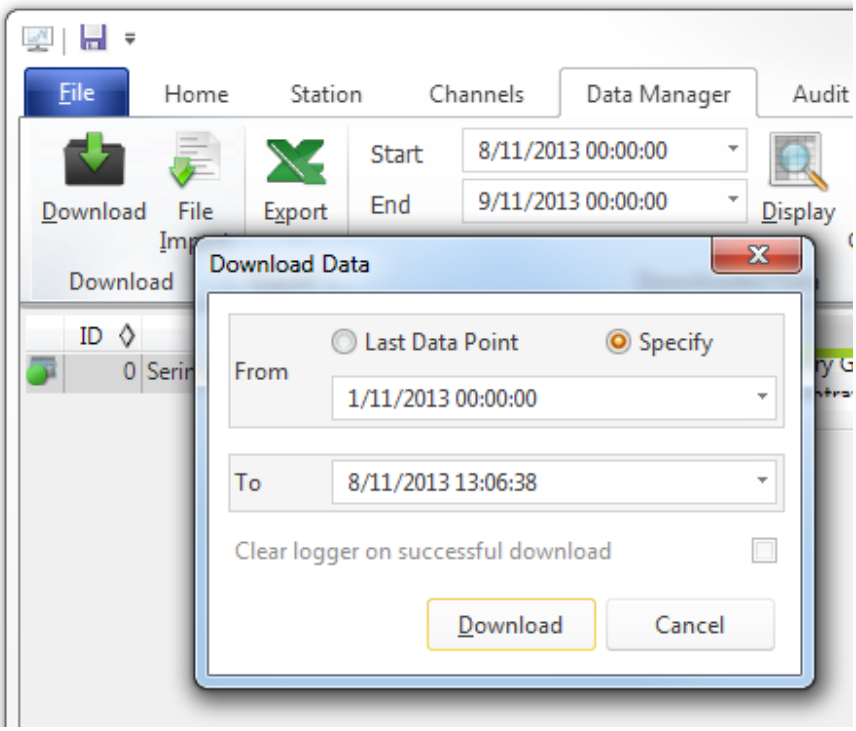

Figure 91 – Downloading Data

8. The status of the download will appear in the bottom-left corner of the window. The user can also monitor the status of the download from the Home tab.

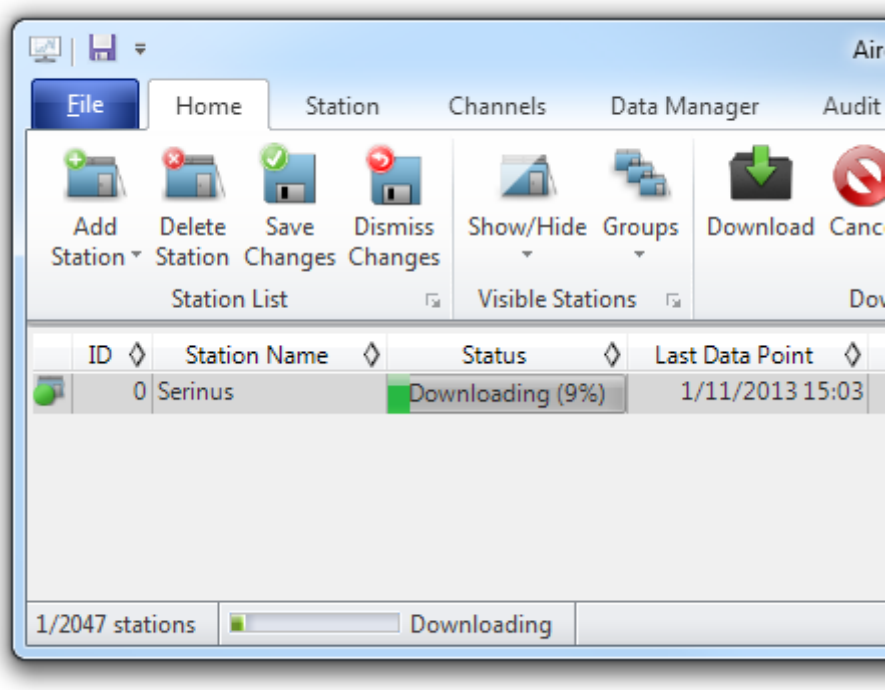

Figure 92 – Download Data Status

9. Data will become available in the data manager as it is downloaded. The user can load data for a date range by entering the start and end dates and clicking Display. The selected data will be loaded into the data manager.

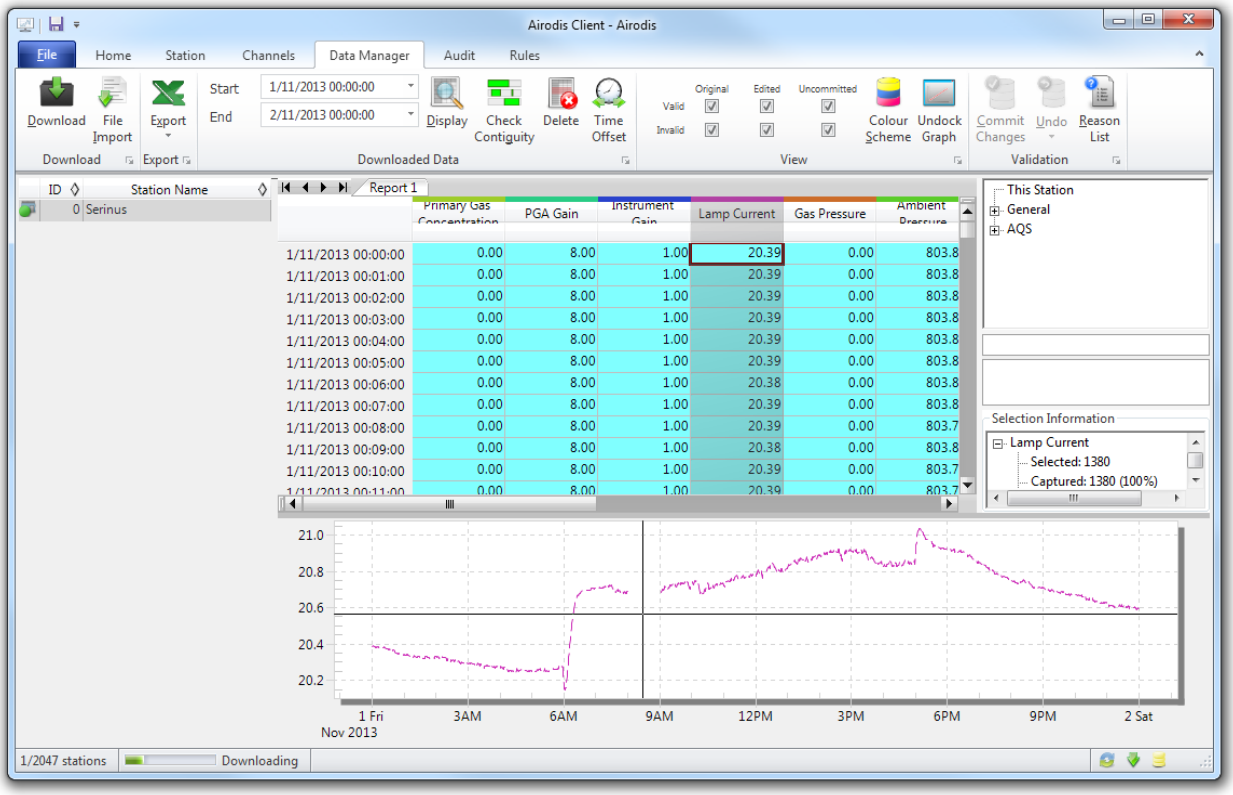

Figure 93 – Data Visibility

10. Data can be exported by clicking the Export function. This will allow the user to save his data in CSV format, which can be loaded into another program such as Microsoft Excel. It is also possible to copy/paste (Ctrl + C / Ctrl + V) data directly from the Airodis data manager.

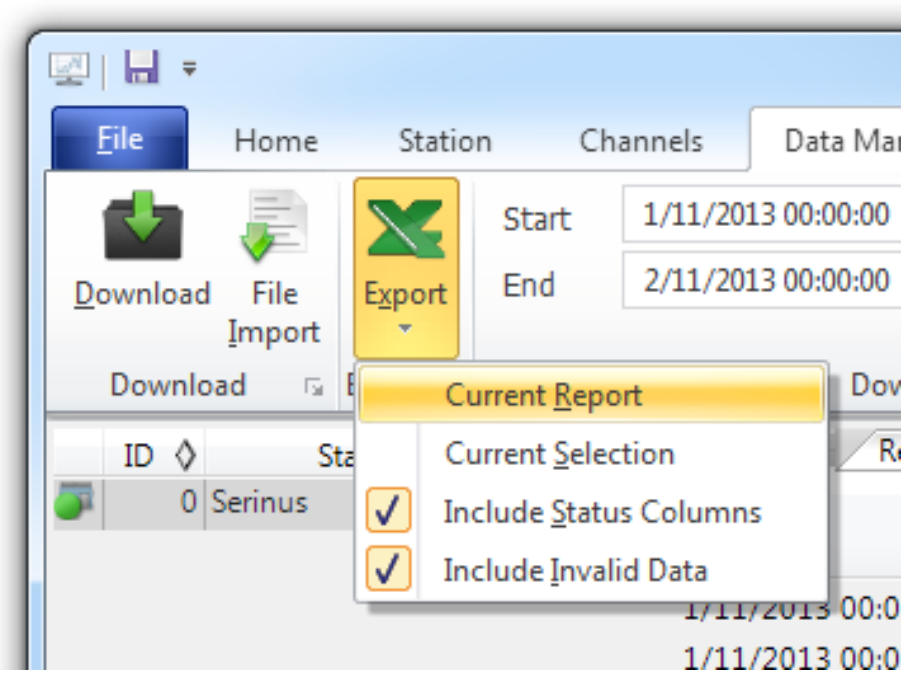

Figure 94 – Exporting Data

11. That's it! The data has been downloaded from the instrument and exported to a standard CSV file.

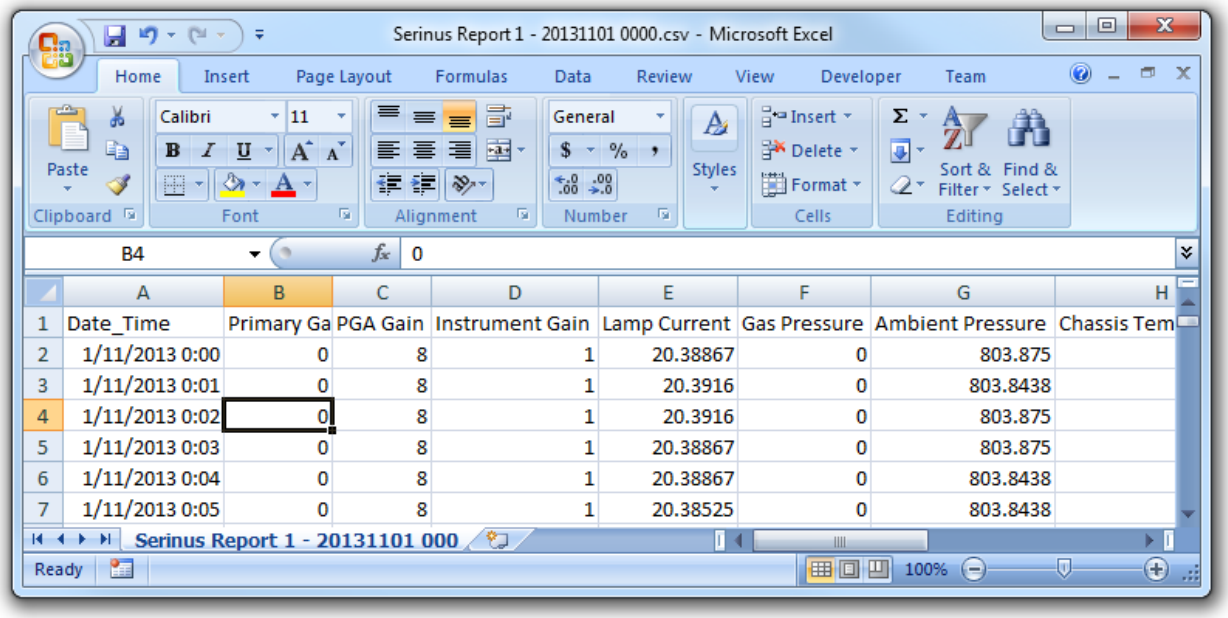

	A	B	C	D	E	F	G	H
1	Date_Time	Primary Ga	PGA Gain	Instrument Gain	Lamp Current	Gas Pressure	Ambient Pressure	Chassis Tem
2	1/11/2013 0:00	0	8	1	20.38867	0	803.875	
3	1/11/2013 0:01	0	8	1	20.3916	0	803.8438	
4	1/11/2013 0:02	0	8	1	20.3916	0	803.875	
5	1/11/2013 0:03	0	8	1	20.38867	0	803.875	
6	1/11/2013 0:04	0	8	1	20.38867	0	803.8438	
7	1/11/2013 0:05	0	8	1	20.38525	0	803.8438	

Figure 95 – Data Download Complete

4.7 Serinus Remote App/Bluetooth

The Serinus Remote Application allows for any Android device (Tablet or Smartphone) to connect to an instrument.

The Serinus Remote Application allows the user to:

- Completely control the instrument using a remote screen displayed on the device.
- Download logged data and take snapshots of all the instrument parameters.
- Construct graphs from logged data or real time measurements.

The following sections cover installation, connection and use of the application.

4.7.1 Installation

The Serinus Remote Application can be found in the Google Play Store by searching for Ecotech or Serinus. Once found, choose to **Install** the application and **Open** to start the application.

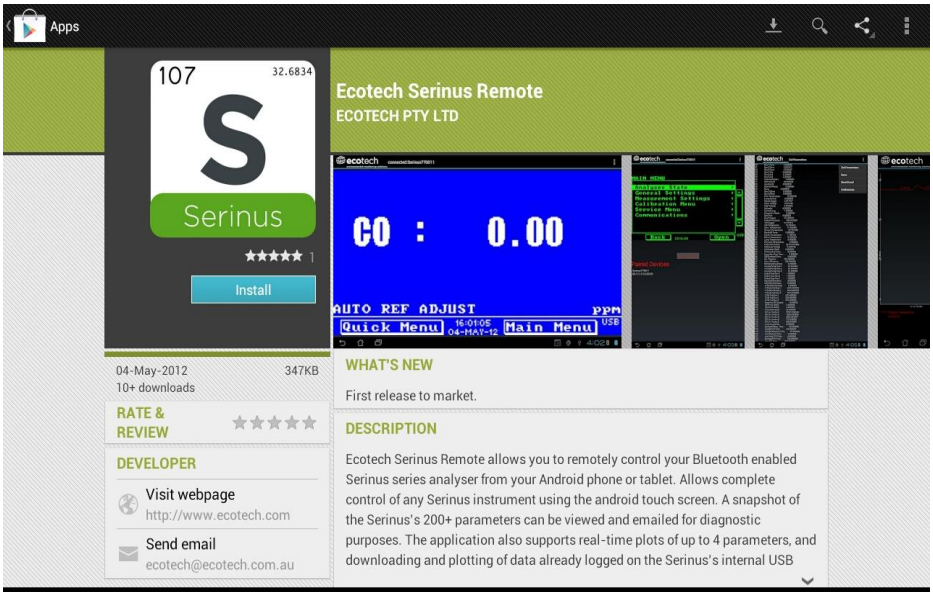

Figure 96 – Downloading the App from Google Play Store

Note: A menu containing additional features and functions can be accessed by entering the Options Menu (or similar) on user's device. The location and format of this menu may vary.

4.7.2 Connecting to the Instrument

Procedure

1. Open - **Main Menu → Communications Menu → Bluetooth Menu** (to find the Bluetooth ID) (refer to Section 3.4.29).
2. Touch the Scan Serinus Analysers button at the bottom of the device screen.
3. Select the Analyser ID from either the **Paired Devices** or the **Other Available Devices**.
4. Input the PIN (if prompted) and press OK (refer to Section 3.4.29).

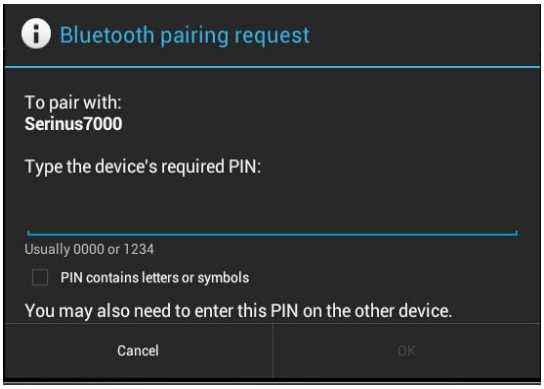

Figure 97 – Bluetooth Pairing Request

5. A screen shot of the instrument's current screen should appear on the user smartphone or tablet. To disconnect press the back key/button on the device.

Note: Once the instrument has been paired with the device it will appear under "Paired Devices" and the PIN will not need to be entered again. Only one Bluetooth connection can be made to an instrument at any one time.

4.7.3 Instrument Control

Once connected the user has full control of the instrument. The range for remote control depends on the device's Bluetooth capabilities and any intervening obstructions, but is usually up to 30 meters.

Remote Screen Operation

With the exception of the number pad, all button functions/actions can be performed by touching the screen. This includes the selection buttons and the scroll buttons. Touching any part of the screen where there is not already a button also enacts the functions of the scroll buttons.

Home Screen

Touching the upper half of the screen increases the contrast and touching the lower half of the screen decreases contrast on the real instrument.

Menus

Touching the upper or lower half of the screen allows the user to scroll up and down respectively.

Right-hand Section of the Screen

Swiping from right to left brings up the number pad for entering numbers (swipe from left to right to hide the number pad).

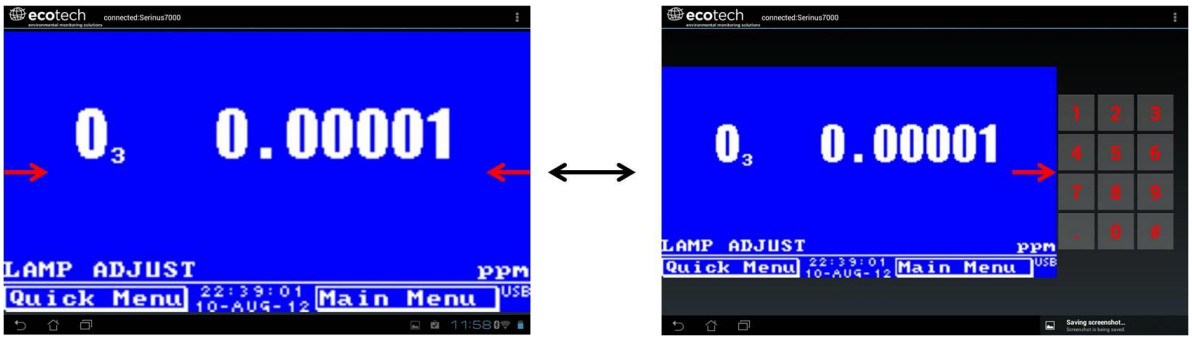

Figure 98 – Showing or Hiding the NumPad

Left-hand Section of the Screen

Swiping from left to right brings up a list of available analysers (swipe from right to left to hide the instrument list).

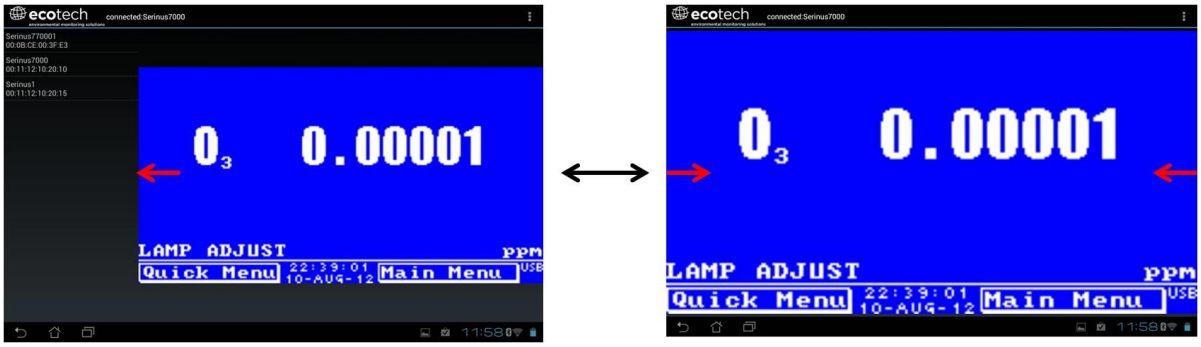

Figure 99 – Switching Analysers

Back Button

This button will enable the user to return to the selection screen, allowing the user to connect to a different instrument.

Options Menu

The Options Menu is accessed by the grey button in the top right corner of the screen or pressing the Menu Button**,** depending on the user's Android device.

Refresh	Refresh the display.
Show/Hide NumPad	Show or hide the number pad.
Real Time Plot	Refer to Section 4.7.4.
Download	Refer to Section 4.7.5.
Get Parameters	Refer to Section 4.7.6.
Preferences	Refer to Section 4.7.7.

4.7.4 Real-Time Plot

Allows the user to view real-time plotting of up to four parameters at the same time. The user can also scroll from left to right, top to bottom or zoom in and out on the plot by swiping/pinching.

Once the plot is zoomed or scrolled, it enters into Observer Mode, meaning that auto-scaling is suspended. Press at the top of the screen (where it says Observer Mode) to return to Normal Mode.

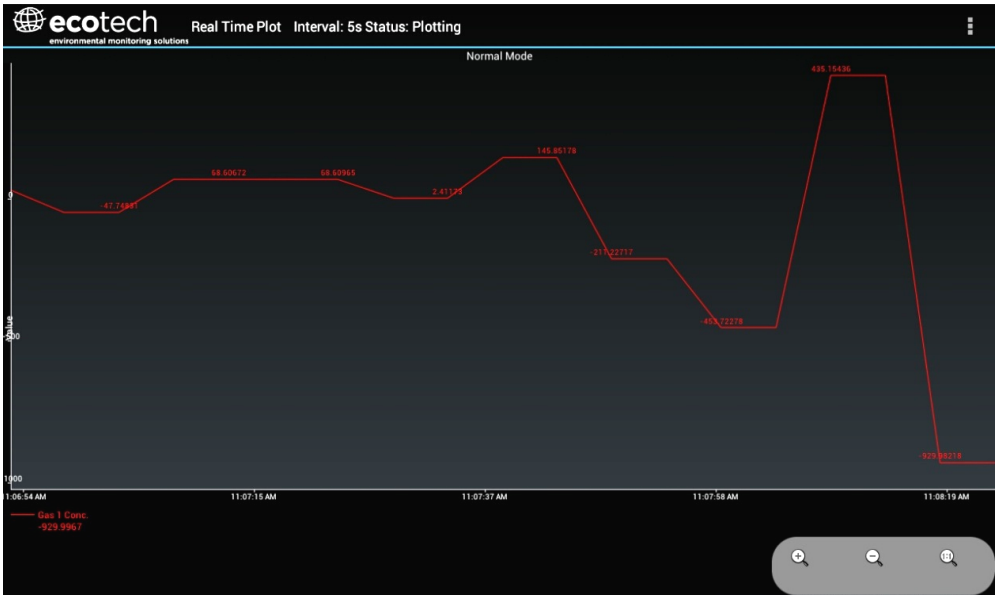

Figure 100 – Real-Time Plot

Options Menu

The Options Menu is accessed by the grey button in the top right corner of the screen or pressing the menu button, depending on the user's Android device.

Start	Restarts graphing if it has been stopped and returns the graph to Normal Mode.
Stop	Stops collecting data. In this mode the user can scroll the display without going into Observer Mode, because the system has no data collection to suspend. It is necessary to "Stop" data collection to set the interval.
Clear	Clears the window and restarts the graphing.
Save	Saves an image of the graph and accompanying data in the location specified in preferences (refer to Section 4.7.7). The user will also be asked whether they want to send the file and data via email. When saving the data, the user can choose to Save All Data or Customise the length of the data by entering a time between five minutes and six hours. Only the data from the start of collection to that limit will be saved (although the plot will still appear exactly as it does on the screen).
Set Interval	While data collection is stopped, the user can specify the time intervals between collections.

4.7.5 Download

Download logged data from the USB memory stick inside the instrument. All data logged by the instrument to the USB memory stick over the period of time specified will be collected. Due to the slow connection speed of Bluetooth, this should only be used for relatively short sections of data. Downloading one days' worth of one minute data is likely to take a couple of minutes.

Options Menu

Save	Generates a filename based on the start and end date/time specified. It saves the downloaded data in the location specified in preferences and asks to send the saved comma separated text file (.csv) as an attachment to an email. This file format does not include the parameter headings, just the values.
Send E-Mail	Sends an email with the parameter data in the body of the email, formatted as displayed (this includes the parameter name and the values).
Plot	Graphs the data that has been downloaded. The user is prompted to select which parameters to plot based on the parameters that were being logged (refer to Figure 98)
Preferences	Refer to Section 4.7.7.

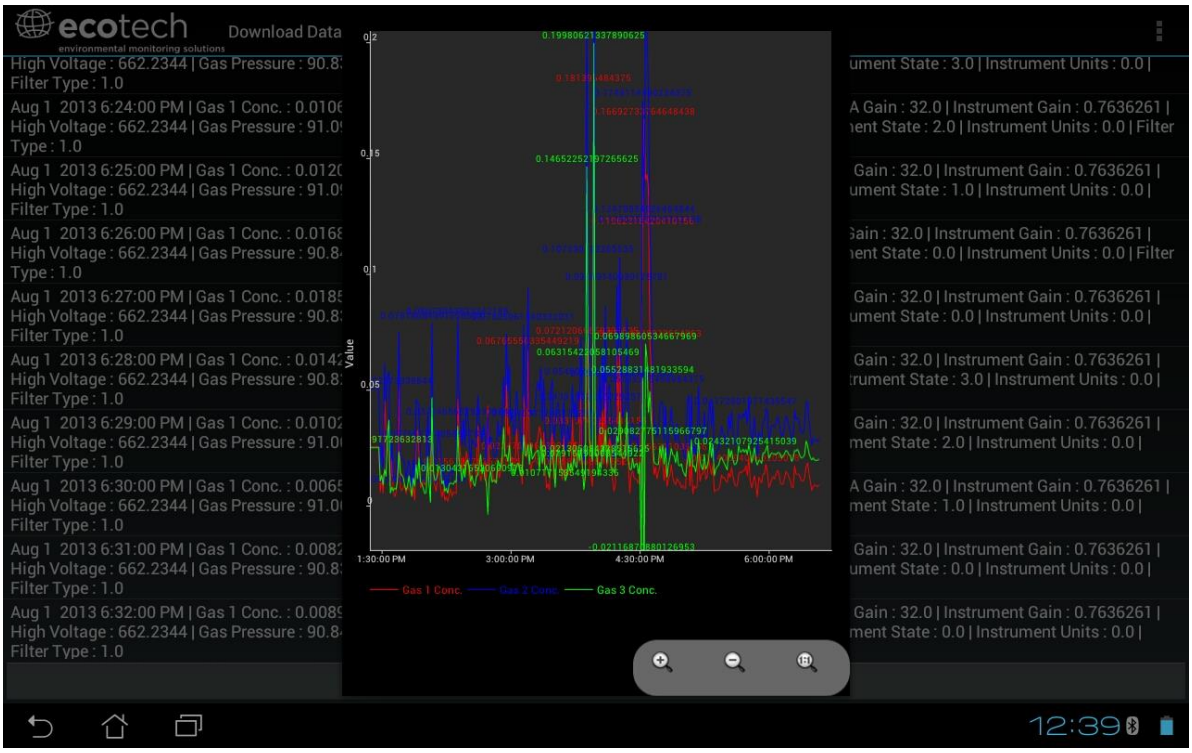

Figure 101 – Plot of Downloaded Data

4.7.6 Get Parameters

Download a list of parameters and corresponding values directly from the instrument. This list of parameters is a snap shot of the current instrument state and is very helpful in diagnosing any problems with the instrument.

Options Menu

Get Parameters	Refreshes the parameter list display.
Save	Generates a filename from the current date and time. It saves the parameter data in the location specified in preferences and asks to send the saved text file as an attachment to an email.
Send E-Mail	Sends an email with the parameter data in the body of the email, formatted as displayed.
Preferences	Refer to Section 4.7.7.

4.7.7 Preferences

The Preferences Menu allows the operator to adjust the directory settings, logged data format and the colour scheme settings. It can be accessed through the **Options Menu** in most windows.

Directory Settings

The operator can specify/select where to save the parameter lists, logged data and real time plots.

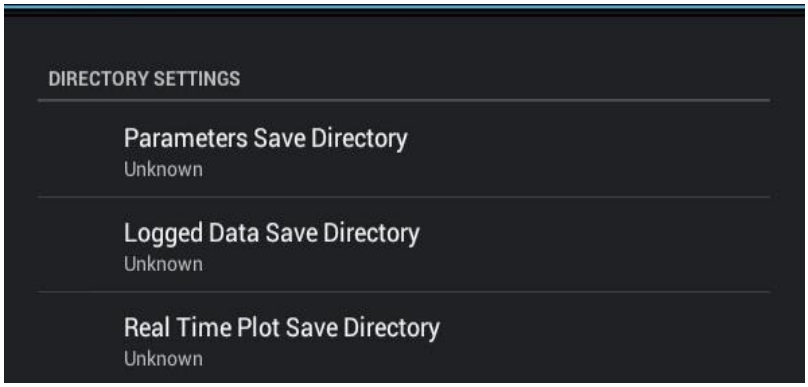

Figure 102 – Directory Settings

Logs Format

When downloading logged data, the parameters can be displayed on one line or each parameter on a separate line.

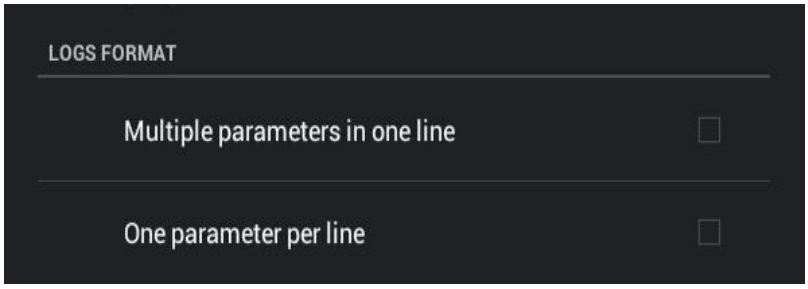

Figure 103 – Logs Format

Colour Theme Settings

Allows the user to choose a colour scheme for the remote screen either Matrix, Classic, Emacs or Custom.

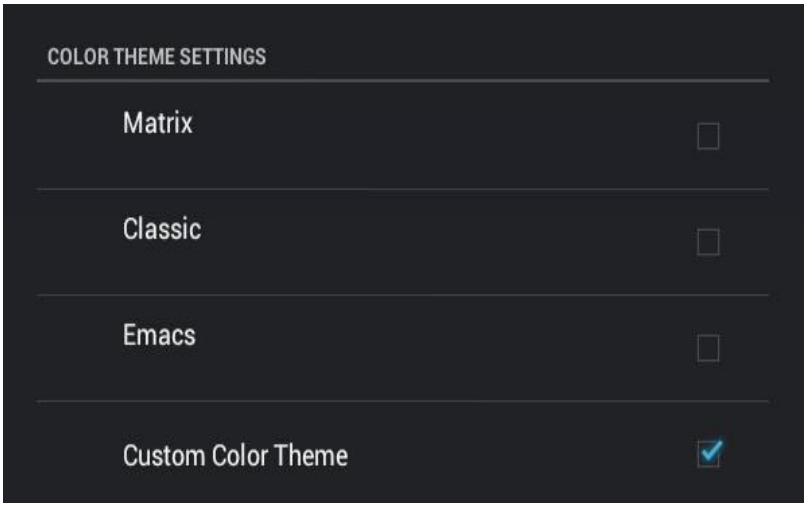

Figure 104 – Colour Theme Settings

This page is intentionally blank.

5. Calibration

The following procedures describe how to calibrate the span and zero point for the instrument as well as giving a brief overview of the calibration system.

Main Menu → Calibration Menu, refer to Section 3.4.10 for information on calibration menu items.

5.1 Overview

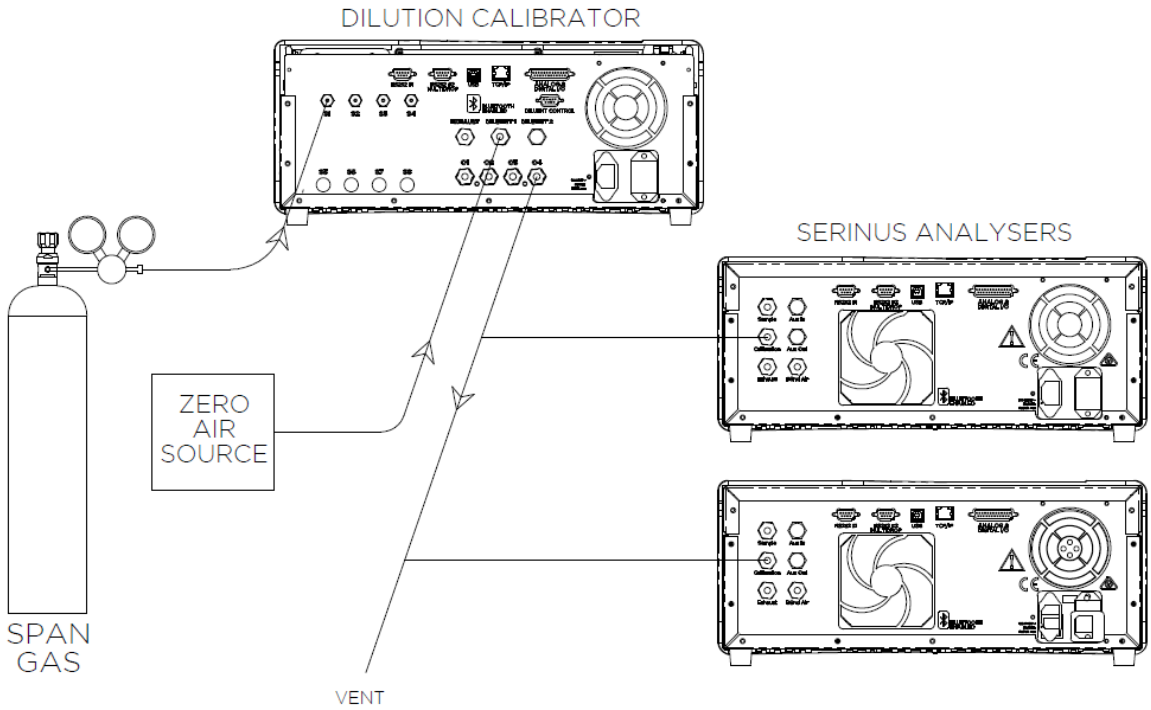

Figure 105 – Example of a Calibration System

CAUTION

All calibration gases MUST be supplied at ambient pressure to avoid damaging the instrument. If direct gas cylinder connection is required, high pressure Span/Zero options can be installed at time of ordering.

The calibration chapter consists of a:

- General discussion of calibration.
- Description of the pressure calibration procedure.
- Description of the Zero/Span precision check and calibration procedures.
- Description of the multipoint precision check procedure.
- Description of the NO_2 converter efficiency check procedure.

The Serinus 40 analyser is a precision measuring device which must be calibrated against a known source of NO & NO_X; within a certified gas cylinder.

There are several different types of checks/calibrations performed:

- Level 1 Calibration – A simplified two-point instrument calibration used when instrument linearity does not need to be checked or verified. This check is typically performed on a monthly basis. Adjustments to the instrument response can only be made when performing level 1 calibration.
- Level 2 Calibration – A simple check of the instrument's response. Level 2 checks may be performed using non-certified reference sources and are most often used as a performance monitoring tool. Commonly referred to as a precision check, the instrument must not be adjusted.
- Multipoint Precision Check – A series of points (typically covering zero and 5 up-scale span points) are supplied to the instrument. They should cover the instruments intended full scale measurement range. These precision checks are used to determine the linearity of the instrument response across its operating range.
- Converter Efficiency Check – A measure of the efficiency of the system to convert the target gas for subsequent measurement. A converter efficiency check is performed on a regular basis to determine the converter performance and adjust the instruments response accordingly.

In general terms, the calibration process includes the following steps:

1. Establish a reliable and stable calibrating source.
2. Provide a satisfactory connection between the calibration source and the instrument.
3. Perform a zero precision check or calibration – zero adjustments apply to the NO, NO_2 channels.
4. Calibrate the instrument against the NO reference – this will adjust the instrument response for the NO and NO_X channels.
5. Perform a multipoint precision check using the NO reference. This determines the linear response of the instrument across the operating range.

Zero and span calibrations are frequently used as a two-point calibration to ensure the readings are accurate and the data obtained has traceability back to a certified reference.

A multipoint precision check is used to establish the relationship between instrument response and gas concentration over the instrument's full scale range.

Note: Zero calibrations are not recommended by Ecotech, but may be performed when specifically required by a user. Calibrating the zero tends to mask issues that should be addressed during maintenance/service.

Regulations generally require that the instrument be span calibrated against a certified calibration source any time:

- The instrument is moved.
- The instrument is serviced.
- The instrument's units are changed by the user between volumetric and gravimetric.

- Whenever the instrument characteristics may have changed.

Regulatory agencies establish the time intervals at which the instrument must be calibrated to ensure satisfactory data for their purposes.

Note: Use of the Serinus 40 analyser as a U.S. EPA or EN-designated equivalent method requires periodic multipoint calibration in accordance with the procedure described in the following sections. In addition, the instrument must be set to the parameters indicated in U.S. EPA or EN Equivalent Set-up in Sections 2.4 & 2.5.

5.2 Pressure Calibration

The pressure sensors are a vital component of the instrument operation. The pressure calibration should be checked on installation or whenever maintenance is performed.

A thorough leak check must be performed prior to performing a pressure calibration (refer to Section 6.4.4).

The pressure calibration can either be a two-point calibration (one point under vacuum and another point at ambient pressure) or a single ambient point calibration (when very minor adjustments are required).

Note: Ensure that the instrument has been running for at least one hour before any calibration is performed to ensure the instrument's stability. When performing a two-point pressure calibration, it is advisable to perform the vacuum pressure calibration first.

5.2.1 Full Pressure Calibration (Two Point Calibration)

This section outlines how to perform a full pressure calibration. Using the required equipment follow the steps below to complete a full pressure calibration.

Note: Ensure that the instrument has been running for at least one hour before the calibration is performed.

Note: Ensure units of measure are the same on both the barometer and instrument.

Equipment Required

- Barometer
- Vacuum source

Procedure

1. Turn OFF the vacuum source and allow the instrument to return to ambient pressure.
2. Disconnect all external tubing connected to the rear ports of the instrument except for the AUX in Port and AUX Out Port (for the external converter).
3. Open - **Main Menu → Calibration Menu → Pressure Calibration Menu** - (read note) - OK.

Note: This action will place the valve sequencing on hold and disable the Ozone generator; normal sampling will be interrupted.

4. Edit - **Vacuum Set Pt.** - (Read displayed instructions) - OK.
5. Connect a vacuum source to **Exhaust Port** (refer to Figure 23) of instrument.

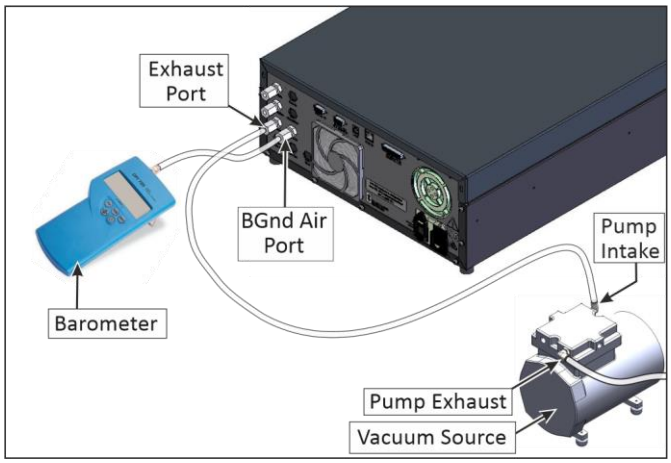

Figure 106 – Full Pressure Calibration Set-up

6. Wait 1 minute for the vacuum to purge the remaining O_3 from the system.
7. Connect a barometer to the **BGnd Air Port**, wait 2 - 5 minutes and ensure the pressure reading on the barometer has dropped and is stable.
8. Enter the barometer reading into the instrument - Accept.

Note: Only the reaction cell and auxiliary valve manifold pressure sensors will be calibrated as they will be exposed to vacuum.

Figure 107 – Full Pressure Calibration Set-up (Ambient)

9. Read displayed instructions - OK.
10. Turn OFF the vacuum source and wait 1 min or until the barometer reads ambient. Disconnect the barometer and vacuum source from the BGnd Air Port and Exhaust Port.
11. Wait 2 - 5 min, enter the ambient barometer reading into the instrument - Accept.

Note: All three sensors should now be displaying the current ambient pressure and they should be the same value within 3 torr of each other.

12. Back - **Pressure Calibration Menu** - (read note) - OK.

5.2.2 Pressure Calibration (Ambient Only)

Full pressure calibrations are generally recommended, however it is possible to calibrate only the ambient point in cases where only a minor ambient pressure adjustment is required.

Note: Ensure that the instrument has been running for at least one hour before any calibration is performed to ensure the instrument's stability.

Note: Ensure units of measure are the same on both the barometer and instrument.

Equipment Required

- Barometer

Procedure

1. Turn OFF the vacuum source and allow the instrument to return to ambient pressure.
2. Disconnect all external tubing connected to the rear ports of the instrument except for the AUX In Port and AUX Out Port (for the external converter).
3. Open - **Main Menu → Calibration Menu → Pressure Calibration Menu** - (read note) - OK.

Note: This action will place the valve sequence on hold; normal sampling will be interrupted.

4. Edit - **Ambient Set Pt.** - (Read displayed instructions) - OK.
5. Wait 2 - 5 minutes and enter the ambient barometer reading into the instrument - Accept.

Note: All three sensors should now be displaying the current ambient pressure and they should be the same value within 3 torr of each other.

Figure 108 – Ambient Pressure Calibration Set-up

6. Back - **Pressure Calibration Menu** - (read note) - OK.

5.2.3 Pressure Calibration (Internal Pump Option Only)

The internal pump requires a separate pressure calibration procedure that replaces the one used in Section 5.2.1 and 5.2.2.

Note: Ensure that the instrument has been running for at least one hour before any calibration is performed to ensure sufficient stability.

Note: Ensure units of measure are the same on both the barometer and instrument.

Equipment Required

- Barometer

Procedure

1. Disconnect any external tubing connected to the rear of the instrument.
2. Open - **Main Menu → Calibration Menu → Pressure Calibration Menu** - (read displayed note) - OK.

Note: Entering this menu will switch OFF the internal pump and place the valve sequencing on hold; normal sampling will be interrupted.

3. Edit - **Vacuum Set Point** - (read displayed instruction) - OK.
4. Refer to Figure 109. Connect a barometer to the **BGnd Air Port**.

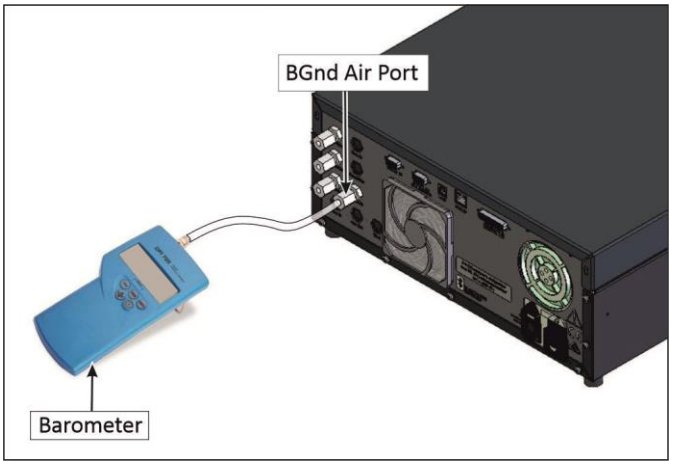

Figure 109 – Pressure Calibration (Internal Pump Option Only) Set-up

5. Wait 2 - 5 minutes and ensure the pressure reading on the barometer is stable.
6. Enter the barometer reading into the instrument - Accept.
7. Read displayed instructions - OK.
8. The pump should now stop automatically. Disconnect the barometer from the **BGnd Air Port**.
9. Wait 2 - 5 minutes and enter the ambient barometer reading into the instrument - Accept.

Note: All four sensors should now be displaying the current ambient pressure and they should be the same value within 3 torr of each other.

10. Back - **Pressure Calibration Menu** - (read note) - OK.

5.3 Zero Calibration

Zero precision checks and calibrations are used to determine the zero response of the instrument and set the offset of the instrument if required.

Performing a zero calibration will adjust the **Zero Offset NO** and **NO2**. These offsets can be checked in the **Main Menu → Service Menu → Calculation Factors Menu** and should be very close to zero. A large offset may indicate a problem with the instrument (refer to Section 7).

Note: Ecotech encourages regular zero checks; however Ecotech recommends that the zero calibration only be performed when specifically required as it may mask issues that should be addressed during maintenance/service.

A zero calibration can be performed either through the **Calibration Port**, **Background Air Port** or the **Sample Port**. Refer to the instructions outlined in the next three sections:

Note: Ensure the instrument has been running for at least one hour before any calibration is performed to ensure sufficient stability.

5.3.1 Calibration Port

Equipment Required

- Zero Air Source (refer to Section 1.3 for definition)

Procedure

1. Ensure a suitable zero air source is connected to the **Calibration Port**.
2. Open - **Main Menu → Calibration Menu**.
3. Select - **Cal. Type → Manual** - Accept.
4. Select - **Cal. Mode → Zero** - Accept.
5. Select - **Zero Source → External** - Accept.
6. Allow the instrument time to achieve a stable response.
7. Enter - **Zero Calibrate (NO)** or **(NO2)** - OK.
8. Select - **Cal. Mode → Measure** - Accept (To return to sample measure).

5.3.2 Sample Port

Equipment Required

- Zero Air Source (refer to Section 1.3 for definition)

Procedure

1. Ensure a suitable zero air source is connected to the **Sample Port**.
2. Open - **Main Menu → Calibration Menu**.
3. Select - **Cal. Type → Manual** - Accept.

4. Select - **Cal. Mode → Measure** - Accept.
5. Select - **Zero Source → External** - Accept.
6. Allow the instrument time to achieve a stable response.
7. Enter - **Zero Calibrate (NO) or (NO2)** - OK.
8. Disconnect the zero air source and reconnect the sample line to the **Sample Port**.

5.3.3 Background Air Port

Equipment Required

- Zero Air Source (refer to Section 1.3 for definition)

Procedure

1. Ensure a suitable zero source is connected to the **BGnd Air Port**.
2. Open - **Main Menu → Calibration Menu**.
3. Select - **Cal. Type → Manual** - Accept.
4. Select - **Cal. Mode → Zero** - Accept.
5. Select - **Zero Source → Internal** - Accept.
6. Allow the instrument time to achieve a stable response.
7. Enter - **Zero Calibrate (NO) or (NO2)** - OK.
8. Select - **Cal. Mode → Measure** - Accept (To return to sample measure).

5.4 Span Calibration

A span calibration is a calibration performed at the upper end of the instrument's measurement range. Ecotech recommends calibration at 80% of the full scale measurement or operating range of the instrument.

While the instrument range is commonly set as a default 0 - 500 ppb, this is widely recognised as no longer being valid with modern digital communication and most regulators will now recommend a range more suited to local conditions.

The instrument can be span adjusted using two methods: the traditional single gain NO_x adjustment or the multiple gain NO channel plus the NO_x channel adjustment. Each method has their own advantages. The single gain operations advantage is the simplicity of only needing to enter one span value, the NO_x certified concentration.

Note: Due to the reactive nature of Nitric Oxide (NO) the concentration can change if oxidized. This can occur by oxygen diffusion via the cylinders regulator or calibration equipment. If this does occur then the Nitic Oxide ratio will change but importantly the Total Oxides of Nitrogen (NO_x) concentration will remain the same.

The advantage of the multiple gain method is that each channel (NO and NO_x) can be separately adjusted to account for any response differences between them.

The multiple gain adjustment should be used if there is confidence that the calibration system is delivering precise concentrations derived from the reference cylinders certificate's stated NO and NO_x concentration.

Note: Ensure that the instrument has been running for at least one hour before any calibration is performed to ensure the instrument's stability.

A span gas can be supplied through either the **Calibration Port** or **Sample Port**. Follow the relevant instructions below:

5.4.1 Calibration Port with Multiple Gains Disabled

Equipment Required

- Span Source

Procedure

1. Ensure a suitable span source is connected to the **Calibration Port**.
2. If diluting the gas with a dilution calibrator, set the output concentration to 80% of the instrument measurement range.
3. Open - **Main Menu → Calibration Menu**.
4. Select - **Cal. Type → Manual** - Accept.
5. Select - **Cal. Mode → Span** - Accept.
6. Let the instrument stabilise, typically 15 minutes.
7. Enter - **Span Calibrate NOx** - (Enter the span output concentration) - Accept.
8. Select - **Cal. Mode → Measure** - Accept (to return to sample measure).

Note: If calibrating with a reference cylinder containing NO_2, ensure that the expected value is based on the certified NO_x concentration rather than the certified NO value.

5.4.2 Sample Port with Multiple Gains Disabled

Equipment Required

- Span source

Procedure

1. Ensure suitable span source is connected to the **Sample Port**.
2. If diluting the gas with a dilution calibrator, set the output concentration to 80% of the instrument measurement range.
3. Open - **Main Menu → Calibration Menu**.
4. Select - **Cal. Type → Manual** - Accept.
5. Select - **Cal. Mode → Measure** - Accept.
6. Let the instrument stabilise, typically 15 minutes.
7. Enter - **Span Calibrate NOx** - (Enter the span output concentration) - Accept.

Note: If calibrating with a reference cylinder containing NO_2, ensure that the expected value is based on the certified NO_x concentration rather than the certified NO value.

8. Disconnect the span source and reconnect the sample line to the **Sample Port**.

5.4.3 Calibration Port with Multiple Gains Enabled

Equipment Required

- Span source

Procedure

1. Ensure a suitable span source is connected to the **Calibration Port**.
2. If diluting the gas with a dilution calibrator, set the output concentration to 80% of the instrument measurement range.
3. Open - **Main Menu → Calibration Menu.**
4. Select - **Cal. Type → Manual** - Accept**.**
5. Select - **Cal. Mode → Span** - Accept.
6. Let the instrument stabilise, typically 15 minutes.
7. Enter - **Span Calibrate NO** - (Enter the span output concentration) - Accept.
8. Enter - **Span Calibrate NOx** - (Enter the span output concentration) - Accept.
9. Select - **Cal. Mode → Measure** - Accept (to return to sample measure).

5.4.4 Sample Port with Multiple Gains Enabled

Equipment Required

- Span source

Procedure

1. Ensure suitable span source is connected to the **Sample Port**.
2. If diluting the gas with a dilution calibrator, set the output concentration to 80% of the instrument measurement range.
3. Open - **Main Menu → Calibration Menu**.
4. Select - **Cal. Type → Manual** - Accept.
5. Select - **Cal. Mode → Measure** - Accept.
6. Let the instrument stabilise, typically 15 minutes.
7. Enter - **Span Calibrate NO** - (Enter the span output concentration) - Accept.
8. Enter - **Span Calibrate NOx** - (Enter the span output concentration) - Accept.
9. Disconnect the span source and reconnect the sample line to the **Sample Port**.

5.4.5 Manual Instrument Gain and Offset Adjustments

CAUTION

Manual adjustment of the Instrument Gain does not take into account the PTF correction and can lead to an incorrect calibration.

At times it may be desirable to manually adjust the instrument's gain and offsets. Typically this option is only used when an instrument calibration has been corrupted and the user wishes to reset the instrument response factors prior to performing a new calibration.

To manually adjust the instrument follow the below procedure:

1. Open - **Main Menu → Service Menu → Calculation Factors Menu**.
2. Edit - **Instrument Gain** - (Adjust as required. 1 is the default) - Accept.
3. Edit - **Zero Offset NO** - (Adjust as required. 0 is the default) - Accept.
4. Edit - **Zero Offset NO_2** - (Adjust as required. 0 is the default) - Accept.

5.5 Precision Check

Similar to a normal zero or span calibration, a precision check is a Level 2 calibration that may be performed using a non-certified reference. The instrument is supplied with a known concentration of span gas (or zero air) and the instrument's response observed. However, no adjustment to the instrument response is made during a precision check.

Note: Ensure that the instrument has been running for at least one hour before any calibration is performed to ensure the instrument's stability.

A precision check can be performed either manually via the **Sample Port** or **Calibration Port** or can also be performed automatically using the **Timed Mode** (refer to Section 3.4.10.2).

Equipment Required

- Span Source
- Zero Air Source

Procedure

1. Supply the instrument with a zero air source (refer to Section 5.2.3 for the procedure of setting up a zero, but do not do a **Zero Calibrate (NO)** or **(NO2)**, and continue following below steps).
2. Observe and record the measurement from the instrument.
3. Supply the instrument with a span source (refer to Section 5.4 for the procedure of setting up a span but do not do a **Span Calibrate NOx**).
4. Observe and record the measurement from the instrument.
5. Check both readings against user local applicable standards.
6. Select - **Cal. Mode → Measure** - Accept (To return to sample measure).

If an instrument fails a span precision check (based on the users local applicable standards), perform a span calibration (refer to Section 5.4).

If an instrument fails a zero precision check (based on the users local applicable standards), resolve the issue by referring to Section 7 Zero Drift.

5.6 Multipoint Precision Check

A multipoint precision check is used to determine the linear response of the instrument across its operating range. The instrument is supplied with span gas at multiple known concentrations, typically a zero point and at least four up-scale points, spread across the operating range of the instrument. The observed concentrations are compared to expected values and the linearity of the instrument assessed against local applicable standards.

Note: The instrument is inherently linear and the instrument gain should NOT be adjusted at each individual point. Non-linearity indicates a problem with the instrument (refer to Section 7). Ensure that the instrument has been running for at least one hour before any calibration is performed to ensure the instrument's stability.

Several methods for producing multiple known concentrations are available to use, such as connecting multiple certified gas cylinders at different concentrations. However, Ecotech strongly recommends the use of a dilution calibrator and a certified cylinder of NO at an appropriate concentration (typically a cylinder of 40 - 100 ppm NO, balance in Nitrogen).

Equipment Required

- Gas Dilution Calibrator which can perform a Gas Phase Titration (GPT) (such as a Serinus Cal 2000/3000) with Ozone.
- A NO gas cylinder reference standard
- Zero Air Generator

Procedure

1. Connect calibration system to the **Calibration Port** of the instrument (Ecotech recommends the Serinus Cal 2000/3000, refer to Figure 105).
2. Generate and record the displayed span concentrations for (at least) five stepped points (of known concentrations) evenly spaced across the instruments measurement range (see the example below).
3. Then using a program such as MS Excel, create an X Y scatter plot of expected concentration versus the recorded instrument response and use linear regression to calculate the line of best fit and the correlation factor (R^2) – refer to the users local applicable standards.

   Example for an instrument measurement range of 500 ppb:

   a. For the 1st concentration, set the gas dilution calibrator to supply **400 ppb** NO_x gas to the instrument.

   b. Allow the instrument to sample the calibration gas until a prolonged stable response is achieved (the amount of time this takes is impacted by the calibration setup). Record the instrument response.

   c. Repeat the above steps using concentrations of **300 ppb**, **200 ppb**, **100 ppb** and a **Zero** point.

d. Graph the results and use linear regression to determine a pass or fail as per user applicable local standards.

$$y = mx + c$$

Note: To highlight hysteresis errors, it is advisable to run the multipoint check in both descending and ascending order - refer to user applicable local standards.

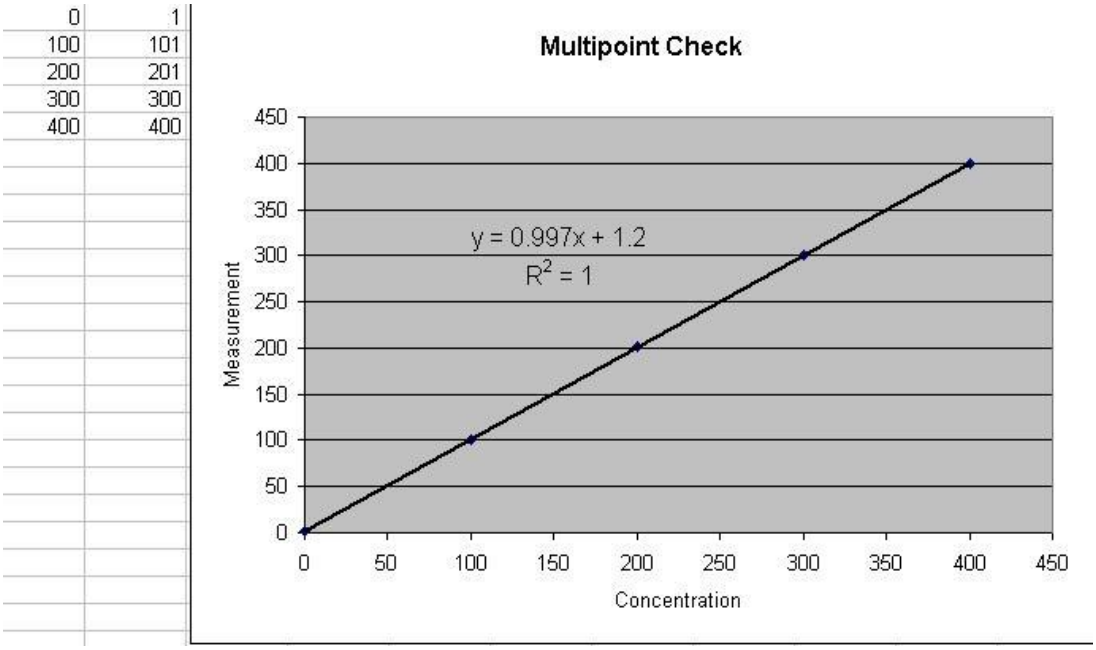

Figure 110 – Multipoint Calibration Results Example

4. The following is a guide to approximate expected good results:
   a. The gradient (m) falls between 0.98 and 1.02.
   b. The intercept (b) lies between -2 and +2.
   c. The correlation (R^2) is greater than 0.99.
5. If unsatisfactory results are observed, refer to Section 7 - troubleshooting.

5.7 NO_2 to NO Converter Efficiency

The NO_2 to NO converter efficiency must be measured at regular intervals. The efficiency must remain about 96% for proper operation of the instrument. The instrument compensates for converter inefficiencies and this compensation must be determined by the method below.

To measure and correct converter efficiency the following equation is used:

$$EFF_{Conversion} = \frac{\Delta[NO_2]}{\Delta[NO]} \times 100 = \frac{[NO_2]_{FINAL} - [NO_2]_{ORIG}}{[NO]_{ORIG} - [NO]_{FINAL}} \times 100$$

Equation 3 – Calculation for Converter Efficiency

$[NO_2]_{ORIG}$ = NO_2 measurement obtained by running a stable concentration of NO span gas through the instrument.

$[NO]_{ORIG}$ = NO measurement obtained by running a stable concentration of NO span gas through the instrument.

$[NO]_{FINAL}$ = NO measurement obtained by running a stable concentration of NO_2 span gas (as generated by reacting O_3 with NO in a GPT calibrator) through the instrument.

$[NO_2]_{FINAL}$= NO_2 measurement obtained by running a stable concentration of NO_2 span gas (as generated by reacting O_3 with NO in a GPT calibrator) through the instrument.

5.7.1 Single Point NO_2 to NO Converter Efficiency Check

This procedure is a simple check to ensure the NO_2 converter efficiency for the NO_X path is within limits and has not significantly deteriorated.

Equipment Required

- Gas Dilution Calibrator which can perform GPT (such as a Serinus Cal 2000/3000).
- NO Gas Standard.
- Zero Air Generators.

Procedure

1. Open - **Main Menu → Calibration Menu**.
2. Note down the current value for **Conv. Efficiency NO2**.
3. Edit - **Conv. Efficiency NO2** - (change to 100%) - Accept.
4. Select - **Cal. Mode → Zero** - Accept.
5. Using the gas dilution calibrator supply the instrument with a point of zero air to calibration port
6. Allow the instrument to achieve a prolonged, stable measurement response and note down the NO and NO_2 values for reference only. If you get greater than 3 - 5 ppb you need to troubleshoot the instrument and calibration system before continuing with this procedure.
7. Stop the zero air point.
8. Select - **Cal. Mode → Span** - Accept.
9. Supply the instrument with NO span gas at a concentration of 80% of the full-scale monitoring range of the particular instrument.
10. Allow the instrument to achieve a prolonged, stable measurement response and note down the NO and NO_2 values. Label them as $[NO]_{ORIG}$ and $[NO_2]_{ORIG}$.
11. Without changing the previous span concentration, turn ON the O_3 generator in the GPT system, and react the NO and O_3 to produce NO_2. The O_3 concentration should be no more than 80% of the supplied NO concentration; there should still be excess un-reacted NO measured by the instrument.
12. Allow the instrument to achieve a prolonged, stable measurement response and note down the NO and NO_2 values. Label them as $[NO]_{FINAL}$ and $[NO_2]_{FINAL}$.
13. Stop running the gas dilution calibration point.
14. Use these noted measurements to calculate the converter efficiency using **Equation 3**.

15. If the converter efficiency is 96% or greater, the converter is working well, return the converter efficiency to the original value. Adjustment to the converter efficiency should only be made based on a multipoint check (refer to Sections 5.7.2 for NO_2 converter efficiency adjustment). If the converter efficiency is less than 96%, the test has failed. The converter may require replacement or try repeating the test and make sure there are no issues with your calibration system. Ensure there is no drift in NO span or generated O_3 during the test.
16. Open - **Main Menu → Calibration Menu**.
17. Edit - **Conv. Efficiency NO2** - (change back to original efficiency) - Accept.
18. Select - **Cal. Mode → Measure** - Accept (To return to sample measure).

5.7.2 Multipoint NO_2 to NO Converter Efficiency Adjustment

A multipoint converter efficiency check is performed to determine the actual converter efficiency across the range of the instrument. The instrument is then adjusted accordingly.

Equipment Required

- Gas Dilution Calibrator which can perform GPT (such as a Serinus Cal 2000/3000).
- NO gas standard.
- Zero Air Generators.

Procedure

1. Open - **Main Menu → Calibration Menu**.
2. Note down the current value for **Conv. Efficiency NO2**.
3. Edit - **Conv. Efficiency NO2** - (change to 100%) - Accept.
4. Supply the instrument with a point of zero air.
5. Allow the instrument to achieve a prolonged, stable measurement response and note down the NO and NO_2 values for reference only. If you get greater than 3 - 5 ppb you need to troubleshoot the instrument and calibration system before continuing with this procedure.
6. Supply the instrument with NO span gas at a concentration of 80% of the full-scale monitoring range of the particular instrument.
7. Allow the instrument to achieve a prolonged, stable measurement response and note down the NO and NO_2 values. Label them as $[NO]_{ORIG}$ and $[NO_2]_{ORIG}$.
8. Without changing the previous span concentration, turn ON the O_3 generator in the GPT system, and react the NO and O_3 to produce NO_2. The O_3 concentration should be no more than 80% of the supplied NO concentration; there should still be excess un-reacted NO measured by the instrument.
9. Allow the instrument to achieve a prolonged, stable measurement response and note down the NO and NO_2 values. Label them as $[NO]_{FINAL}$ and $[NO_2]_{FINAL}$.
10. Use these noted measurements to calculate the converter efficiency using **Equation 3**.
11. Repeat steps 8 - 10 for a minimum of two more O_3 points, spread across the measurement range of the instrument and note down the results.
12. Average the efficiencies. If the calculated result is above 96% efficient than the test has passed enter the result as the new **Conv. Efficiency NO2**. If the converter efficiency is below 96%, the test

has failed and the converter may require replacement. Try repeating the test and make sure there are no issues with your calibration system. Ensure there is no drift in NO span or generated O_3 during the test.

13. Open - Main **Menu → Calibration Menu**.
14. Edit - **Conv. Efficiency NO2** - (enter averaged efficiency result (only if test passed)) - Accept.

5.8 High Pressure Zero/Span Valve (Option)

If the instrument was ordered with this option, the internal pressurised calibration valves will already be installed within the instrument as either a zero or span calibration source, thus no other internal connections need to be made.

Note: Before using a high pressure span or zero as a source for calibrating the instrument, check the local regulatory requirements. This is generally only be used as an operational check of the instrument's zero point and single span point (recommended as 80% of full scale).

5.8.1 Single Pressurised Calibration Option

Set-Up of Single Calibration Option

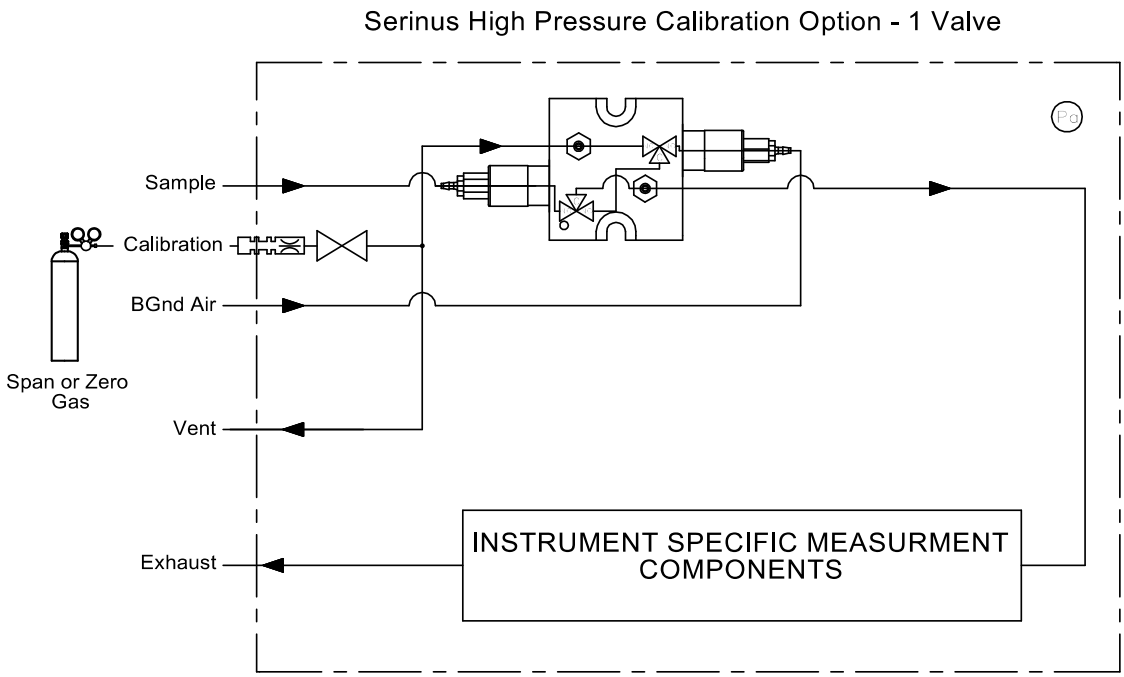

Figure 111 – Single High Pressure Calibration Option

When using the pressurised calibration option, either a high pressure zero or span cylinder (depending on the option ordered) should be connected to the **Calibration Port**.

Equipment Required

- Calibrated Flow Meter
- Gas Cylinder and Accessories

Procedure

1. Ensure the gas cylinder is fitted with an appropriate gas regulator with a shut off valve.
2. Connect a 1/4" line of stainless steel tubing between the gas cylinder and the instruments **Calibration Port**.

Note: This connection may need to be retightened during this operation.

3. Open the cylinder main valve and adjust the regulator to 15 psig.
4. Open the regulator's shutoff valve and test for leaks:
   a. Pressurise the line.
   b. Close the cylinder main valve.
   c. If pressure drops by more than 2 PSI over 5 minutes, check the connections and retest.
   d. Open cylinder main valve.
5. Temporarily place a flow meter on the **Vent Port**.
6. Open - **Main Menu → Calibration Menu**.
7. **Select - Cal. Type → Manual - Accept.**
8. Select - **Cal. Mode → Span** or **Zero** - Accept (Depending on the option installed).

Note: When using the high pressure zero option, ensure **Zero Source** is set to **External**.

9. Adjust the regulator pressure until the flow meter on the **Vent Port** is between 0.5 and 1 slpm. This is the excess calibration gas.

Note: Do not exceed a pressure of 2 bars, this can damage the instrument and cause gas leakage.

Return to Normal Operation

1. Select - **Cal. Mode → Measure** - Accept. (To return to sample measure).
2. Remove the flow meter on the **Vent Port** and connect a vent line.
3. Reconnect the instrument fittings and return to the original set-up.

The instrument is now in normal operation mode. When either zero or span calibration is initiated (depending on which option has been installed) the instrument will automatically open the valves to run a pressurised calibration.

5.8.2 Dual Pressurised Calibration Option

Set-Up of Dual Calibration Option

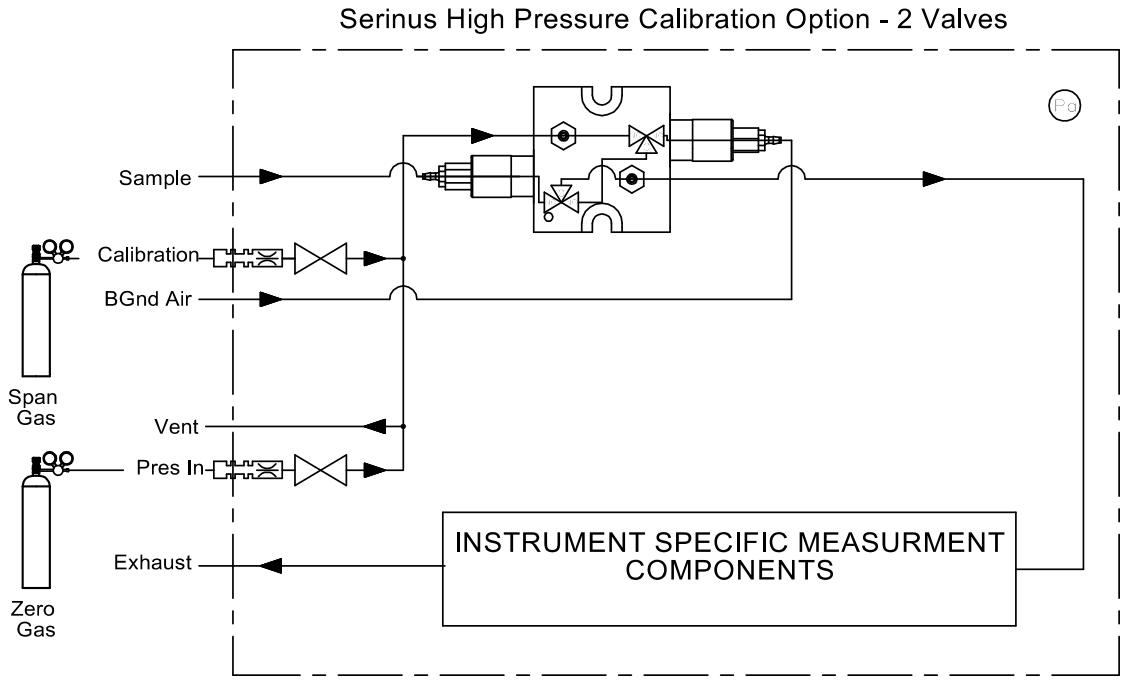

Figure 112 – Dual High Pressure Calibration Option

When using the dual pressurised calibration option, a high pressure zero cylinder should be connected to the **Pres In Port** and a high pressure span cylinder connected to the **Calibration Port**.

Equipment Required

- Calibrated Flow Meter
- Gas Cylinder of Zero air and Accessories
- Gas Cylinder of NO and Accessories

Procedure

1. Ensure the gas cylinder is fitted with an appropriate gas regulator with a shut off valve.
2. Connect a 1/4" line of stainless steel tubing between the appropriate gas cylinders and the instrument's **Pres In Port** and **Calibration Port**.

Note: This connection may need to be retightened during this operation.

3. Open the cylinder main valve and adjust the regulator to 15 psig.
4. Open the regulator's shutoff valve and test for leaks:
   a. Pressurise the line.
   b. Close the cylinder main valve.
   c. If pressure drops by more than 2 PSI over 5 minutes, check the connections and retest.
   d. Open cylinder main valve.

5. Temporarily place a flow meter on the **Vent Port** (This port is now used as the high pressure calibration vent for both span and zero).
6. Open - **Main Menu → Calibration Menu**.
7. **Select - Cal. Type → Manual - Accept.**
8. Select - **Cal. Mode → Zero** - Accept.

Note: When using the high pressure zero option, ensure **Zero Source** is set to **External**.

9. Adjust the regulator pressure until the flow meter on the **Vent Port** is between 0.5 and 1 slpm. This is the excess calibration gas.

Note: Do not exceed a pressure of two bars, this can damage the instrument and cause gas leakage.

10. Select - **Cal. Mode → Span** - Accept.
11. Adjust the regulator pressure until the flow meter on the **Vent Port** is between 0.5 and 1 slpm. This is the excess calibration gas.

Note: Do not exceed a pressure of two bars, this can damage the instrument and cause gas leakage.

Return to Normal Operation

1. Select - **Cal. Mode → Measure** - Accept. (To return to sample measure).
2. Remove the flow meter on the **Vent Port** and connect a vent line.
3. Reconnect the instrument fittings and return to the original set-up.

The instrument is now in normal operation mode. When either zero or span calibration is initiated, the instrument will automatically open the valves to run a pressurised calibration.

This page is intentionally blank.

6. Service

6.1 Additional Safety Requirements for Service Personnel

In addition to Safety Information stated previously, service personnel are also advised of the following:

- Documentation must be consulted in all cases where caution symbol is marked, in order to find out the nature of the potential hazards and any actions which have to be taken to avoid them. Refer to Table 1 – Internationally Recognised Symbols.
- Do not energise the instrument until all conductive cleaning liquids, used on internal components, are dried up
- Do not replace the detachable mains supply cord with an inadequately rated cord. Any mains supply cord that is used with the instrument must comply with the safety requirements (250V/10A minimum requirement).

6.2 Maintenance Tools

To perform general maintenance on the Serinus 40 the user may require the following equipment:

- Customizable Test Equipment Case — PN: H070301
- Digital Multimeter & Leads (DMM) — PN: E031081 & E031082
- Barometer — PN: E031080
- Thermometer & Probe — PN: E031078 & E031079
- Flow Meter (Select Range)
  Range: 50 sccm - 5000 sccm — PN: ZBI-200-220M
- Minifit Extraction Tool — PN: T030001
- Orifice/Sintered Filter Extraction Tool — PN: H010046
- Leak Test Jig — PN: H050069
- Computer/Laptop and Connection Cable for Diagnostic Tests
- 1.5 mm hex key
- Assortment of 1/4” and 1/8” Tubing and Fittings
- Zero Air Source
- Span Gas Source
- General Hand Tools

Figure 113 – Minifit Extraction Tool – (PN: T030001)

Figure 114 – Orifice/Sintered Filter Removal Tool – (PN: H010046)

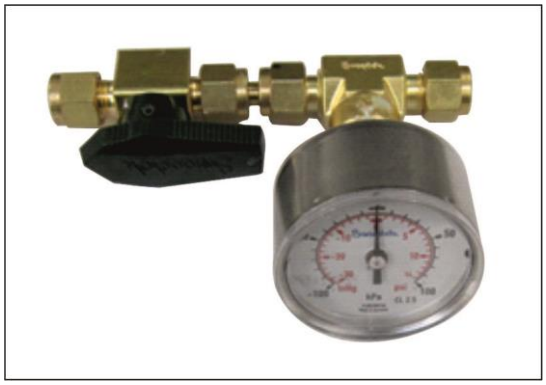

Figure 115 – Leak Test Jig – (PN: H050069)

Figure 116 – Air Monitoring Test Equipment Kit (AMTEK) – Customisable

6.3 Maintenance Schedule

The maintenance intervals are determined by compliance standards that differ in various regions. The following is recommended by Ecotech as a guide. Compliance with local regulatory or international standards is the responsibility of the user.

Table 8 – Maintenance Schedule

Interval *	Task Performed	Section
Nightly or Every 5 days	Perform precision check (Automated) Perform precision check (Manual) (This task is performed to ensure a high data capture rate)	5.5
Monthly	Perform precision check (pre-check) prior to commencing any service tasks or making any changes to the system as found in its current state. This task is necessary to validate any previously captured data.	5.5
	Check particulate filter, replace if full/dirty	6.4.1
	Perform a pressure check	6.4.8
	Check sample inlet system for moisture or foreign materials. Clean if necessary	
	Check fan filter and clean if necessary	6.4.2
	Check event log	3.4.1
	Check date and time is correct	3.4.8
	Check instrument status light	3.3.1
	External vacuum pump check (vacuum source) Cell Pressure of 50 - 200 torr is a good vacuum	
	Leak check	6.4.4
	Perform span calibration	5.4
	Perform precision check (post-check) once all service tasks have been completed. This task is necessary to establish a valid start point to begin capturing new data.	5.5
3 Monthly	Single point NO_2 converter efficiency check	5.7.1
6 Monthly	Replace the PMT Desiccant Packs	6.4.5
	Perform multipoint precision check	5.6
	Calibrate analog outputs (only if used)	3.4.25
Yearly	Replace DFU filter	6.4.3
	Replace sintered filter and orifice (only if necessary)	9.13 & 9.14
	Clean reaction cell	6.4.7
	Multipoint NO_2 to NO converter efficiency adjust	5.7.2

* Suggested intervals for maintenance procedure are a guide only and may vary with sampling intensity and/or environmental conditions. Refer to your local regulatory standard for your personalised maintenance schedule.

6.4 Maintenance Procedures

Note: The Serinus 40 internal Ozone destroyer removes close to 100% of Ozone in the exhaust air (< 20 ppb remains). An additional optional charcoal scrubber can be attached to the exhaust to capture NO_2 and low levels of Ozone.

6.4.1 Particulate Filter Replacement

Contamination of the 5-micron filter can result in degraded performance of the instrument, including slow response time, erroneous readings, temperature drift and various other problems. The frequency which the filter needs to be replaced is heavily dependent on the environmental conditions the instrument is sampling.

1. Turn OFF the external pump and allow the instrument to return to ambient.
2. Open the lid of the instrument to access the sample filter holder (located in front right-hand corner).
3. Refer to Figure 117. Remove the compression nut and tubing from the fitting.

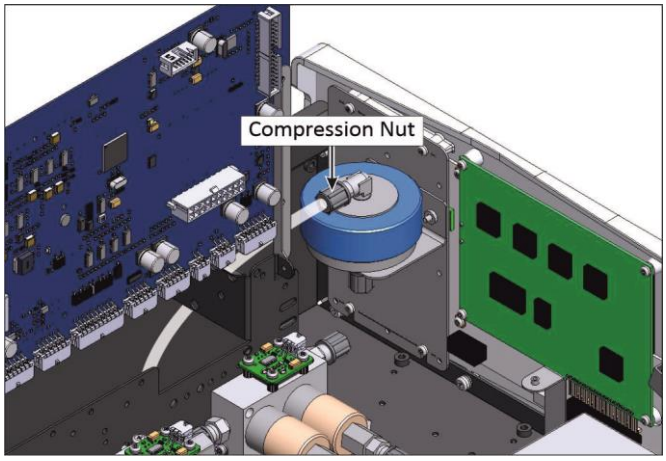

Figure 117 – Remove Compression Nut

4. Refer to Figure 118. Remove the retaining ring by turning it counter-clockwise.

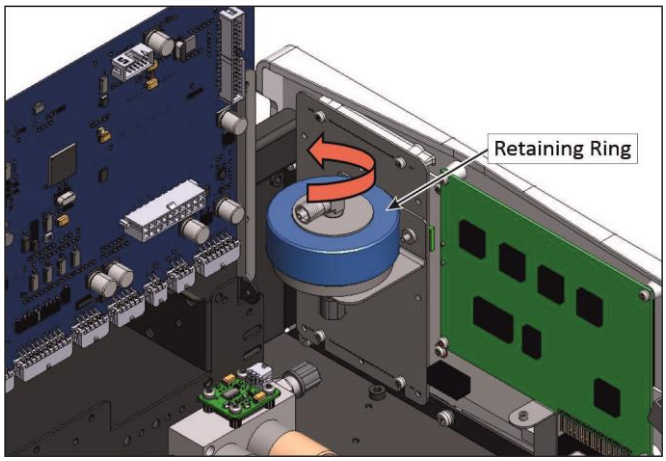

Figure 118 – Remove Retaining Ring

5. Refer to Figure 119. Remove the sample filter holder sealing cap.

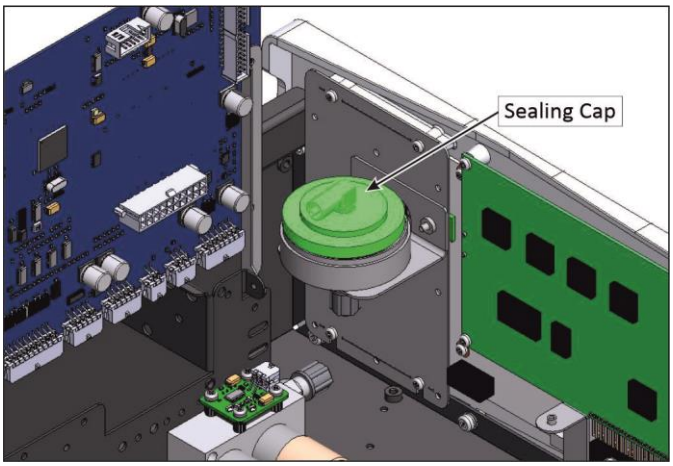

Figure 119 – Remove Filter Sealing Cap

6. Refer to Figure 120 – Particulate Filter. Remove the old particulate filter.

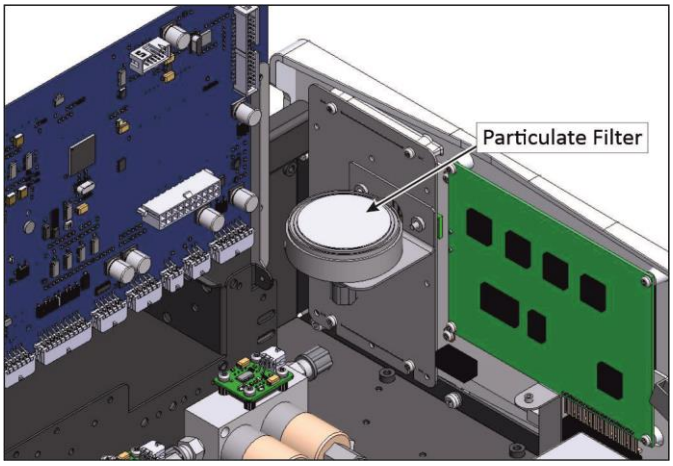

Figure 120 – Particulate Filter

7. If the inner surface of the sample filter components are dirty, then clean with damp lint free paper towel.
8. Place a new particulate filter paper into the body of the sample filter holder.

Note: Make sure filter body is completely dry before placing the new filter.

Note: Avoid to touch Particulate filter paper by hand use blue paper to place the filter into filter body.

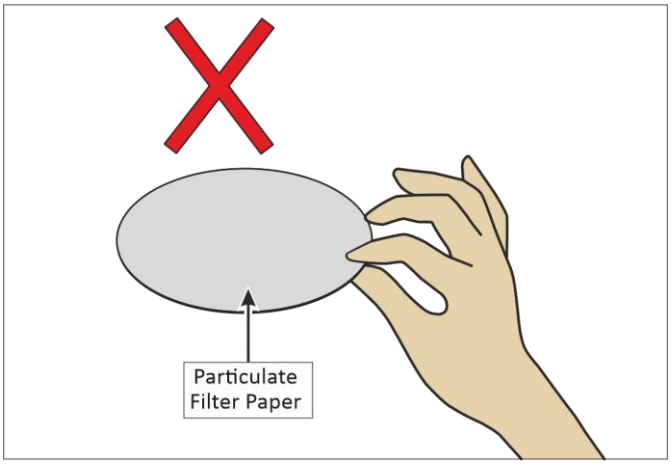

Figure 121 – Avoid to Touching Particulate Filter Paper

9. Replace the sample filter holder sealing cap and re-assembly the retaining ring by turning it clockwise.

Note: Make sure O-ring and particulate filter paper are installed correctly

Note: Make sure that compression fitting elbow is in the right direction, refer to Figure 122.

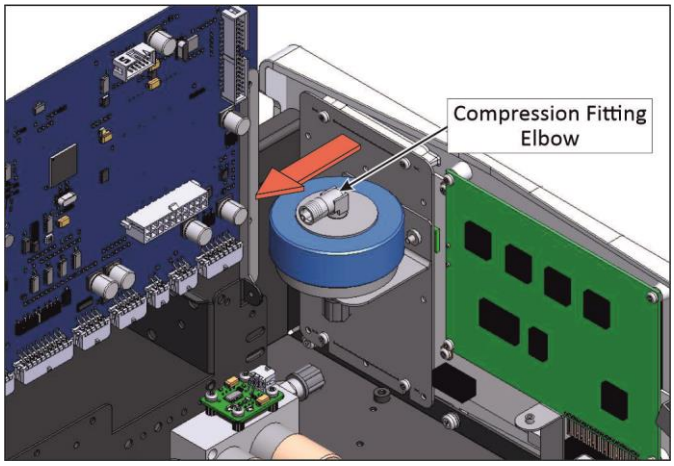

Figure 122 – Compression Fitting Elbow Direction

10. Reconnect the compression nut and tubing with the fitting to the top of the sample filter holder.
11. Close the lid of the instrument and perform a leak check (refer to Section 6.4.4).

6.4.2 Clean Chassis Fan Filter

The chassis fan filter is located on the rear of the instrument. If this filter becomes contaminated with dust and dirt it may affect the cooling capacity of the instrument.

CAUTION

Do not insert a rod or finger into the cooling fans, otherwise injury may result.

1. Refer to Figure 123. Remove outer filter casing and filter.

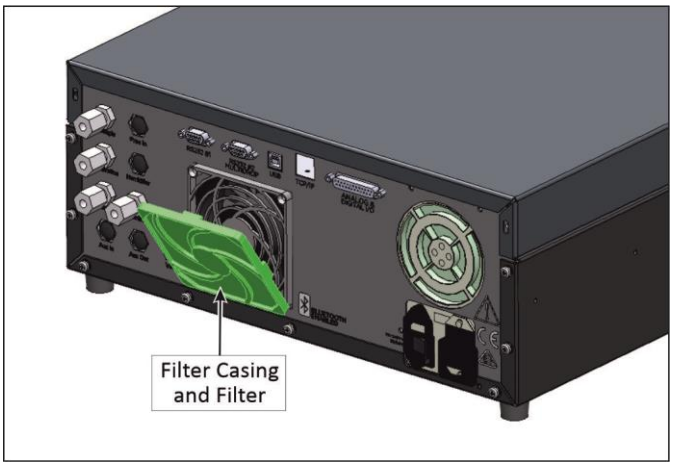

Figure 123 – Remove Filter Casing and Filter

2. Clean filter with water and dry it.

Note: Do not install the filter until completely dry, a wet filter can damage the instrument.

3. Reinstall filter and filter casing.

6.4.3 DFU Replacement

Equipment Required

- 5/8” Spanner

Procedure

1. Turn OFF the external pump and allow the instrument to return to ambient.
2. Remove the Kynar nuts from both ends of the DFU by turning them counter-clockwise.
3. Remove and replace the DFU (refer to Figure 124 right hand side of the DFU in the image should connect to the dryer).

Figure 124 – DFU Filter

4. Tighten the Kynar nut clockwise.

6.4.4 Leak Check

Equipment Required

- Source of Vacuum (Pump)

- Leak Test Jig (PN: H050069)
- Kynar ¼” Blocker Nuts
- Tubing and Assorted Fittings
- 5/8” Spanner
- 9/16” Spanner

Procedure

Note: Ensure that the instrument has been running for at least one hour before this procedure is performed.

1. Turn OFF the external vacuum source connected to the exhaust port and allow the instrument to return to ambient pressure.
2. Disconnect all external tubing connected to the rear ports of the instrument.
3. Connect a leak check jig to the **Exhaust Port** of the instrument.

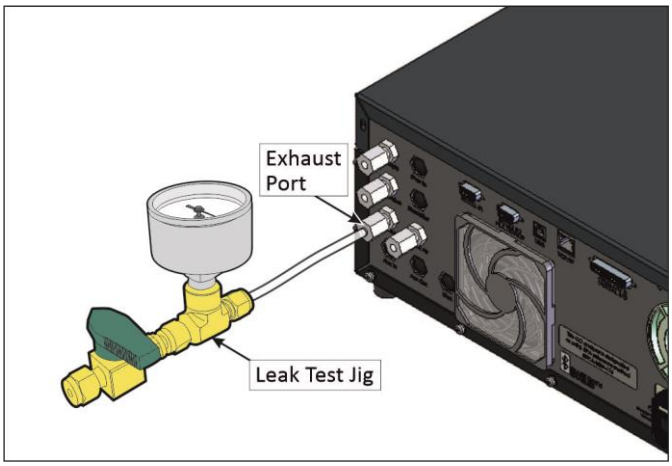

Figure 125 – Leak Test Jig on Exhaust Port

4. Connect a vacuum source to the shut off valve end of the leak test jig ensuring the shut off valve is in the open position.

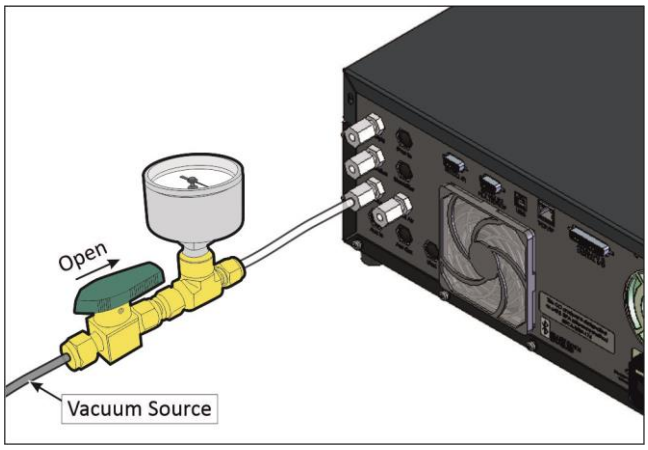

Figure 126 – Connect Vacuum Source

5. Open - **Main Menu → Service Menu**.
6. Select - **Ozone Gen. Control** → Off.
7. Allow the instrument two minutes to purge the O3 from the pneumatic system.
8. Open - **Main Menu → Service Menu → Diagnostics Menu → Valve Menu**.
9. Disable - **Valve Sequencing** → Disabled.
10. Open - **Sample/Cal → On**
11. Close - **Internal Zero/Cal → Off**.
12. Close - **Pressurized Zero (OPT) → Off**.
13. Close - **Pressurized Span (OPT) → Off**.
14. Open – **NO Select → On**.
15. Close – **NOx Select → Off**.
16. Close – **Measure/Background→ Off**.
17. Block the instrument's **BGnd Air Port** with Kynar 1/4" blocker nut.
18. Allow the instrument time to evacuate the pneumatic system (the time required will depend on the vacuum source used).
19. Close the shut off valve and record the vacuum. Wait for three minutes and observe the gauge on the leak check jig. It should not drop more than 5 kpa (37.5 torr). If the leak check passed skip to step 22.
20. Inspect the instrument's plumbing looking for obvious damage. Check the condition of fittings, particulate filter housing plus the O-rings both in the filter assembly and in the cell assembly.
21. If the leak is still present divide up the pneumatic system into discrete sections to locate the leak (refer to Section 9.5). When the location of the leak has been determined repair and then rerun the leak check procedure.
22. Open - **Main Menu → Service Menu → Diagnostics Menu → Valve Menu**.
23. Turn OFF the **Sample/Cal Valve** (this is done to release the vacuum safely).
24. Allow one minute for the system to equalise even when your gauge is back at ambient (residual vacuum will still be in sections of the system). Remove the blocker on the **BGnd Air Port** and inspect the internal tubing to ensuring that the tubing is cleanly connected to the fittings and that the internal Teflon lining has not been kinked or crumpled.
25. Remove the leak check jig.
26. Enable - **Valve Sequencing → Enabled.**
27. Open - **Main Menu → Service Menu.**
28. Select - **Ozone Gen. Control → Auto.**

Note: In this leak check procedure we have not checked the Sample and Calibration Line.

6.4.4.1 Leak Check (Internal Pump Option)

Equipment Required

- Barometer
- Kynar 1/4” Blocker Nuts
- 5/8” Spanner
- 9/16” Spanner
- 7/16” Spanner

Procedure

Note: Ensure that the instrument has been running for at least one hour before this procedure is performed.

1. Disconnect all external tubing connected to the rear ports of the instrument.
2. Remove the lid to access the internals of the instrument.
3. If not already ON, ensure the internal pump is ON and running.
4. Open - **Main Menu → Service Menu**.
5. Select - **Ozone Gen. Control → Off**.
6. Allow the instrument two minutes to purge the O3 from the pneumatic system.
7. Open - **Main Menu → Service Menu → Diagnostics Menu → Internal Pump Menu**.
8. Locate and turn the manual stop valve 90° (close), located near the bypass pump.

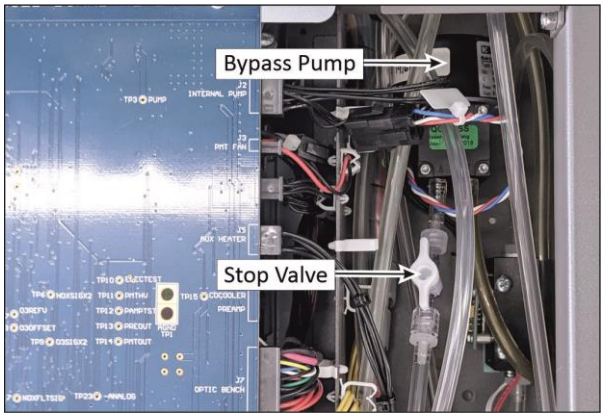

Figure 127 – Stop Valve (Bypass Pump)

9. Select - **Bypass Pump → Off**.
10. Select - **Pump Control → Manual** - Accept.
11. Edit - **Coarse** - (set to 255) - Accept.
12. Edit - **Fine** - (set to 100) - Accept.
13. Open - **Main Menu → Service Menu → Diagnostics Menu → Valve Menu**.
14. Disable - **Valve Sequencing → Disabled**.
15. Open - **Sample/Cal → On**

16. Close - **Internal Zero/Cal → Off**.
17. Close - **Pressurized Zero (OPT) → Off**.
18. Close - **Pressurized Span (OPT) → Off**.
19. Open – **NO Select → On**.
20. Close – **NOx Select → Off**.
21. Close – **Measure/Background→ Off**.
22. Connect the barometer to **Background Air** Port.
23. Allow the internal pump to time to evacuate the pneumatic system (the time required will depend on the condition of the pump 1 - 2 minutes).
24. Locate and turn the manual stop valve 90° (close), located near the sample pump.

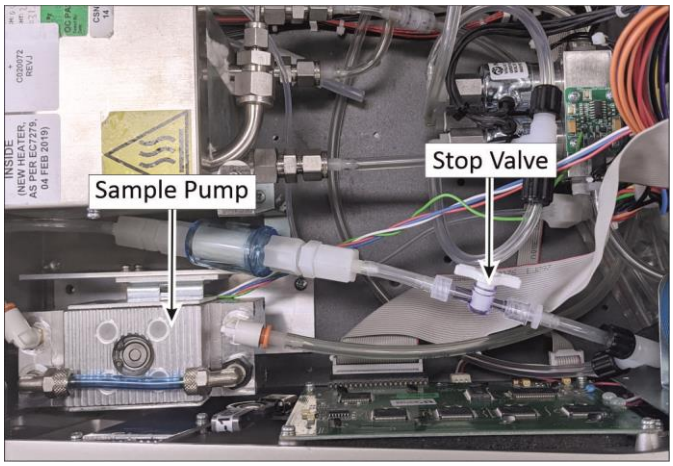

Figure 128 – Stop Valve (Sample Pump)

25. Open - **Main Menu → Service Menu → Diagnostics Menu → Internal Pump Menu**.
26. Toggle OFF - **Internal Pump → Off**.
27. Note the value on the barometer. Wait for 3 minutes, the value should not increase more than 5 kpa (37.5 torr). If the leak check passed skip to step 30.
28. Inspect the instrument's plumbing looking for obvious damage. Check the condition of fittings, particulate filter housing plus the O-rings both in the filter assembly and in the cell assembly.
29. If the leak is still present divide up the pneumatic system into discrete sections to locate the leak (refer to Section 9.6). When the location of the leak has been determined repair and then rerun the leak check procedure.
30. Open - **Main Menu → Service Menu → Diagnostics Menu → Valve Menu**.
31. Turn OFF the **Sample/Cal Valve** (this is done to release the vacuum safely).
32. Allow one minute for the system to equalise even when your barometer is back at ambient (residual vacuum will still be in sections of the system).
33. Slowly remove the barometer from the **Background Air Port**, allowing the instrument to return to ambient pressure.
34. Turn the manual stop valve 90° (open) for both the sample pump and the Bypass pump.

35. Open - **Main Menu → Service Menu → Diagnostics Menu → Valve Menu**.
36. Enable - **Valve Sequencing → Enabled**.
37. Open - **Main Menu → Service Menu.**
38. Select - **Ozone Gen. Control → Auto.**
39. Open - **Main Menu → Service Menu → Diagnostics Menu → Internal Pump Menu**.
40. Select - **Pump Control → Start** - Accept.
41. Select – **Bypass Pump → Start** - Accept.
42. Replace the lid.
43. Reconnect all external tubing to the rear ports of the instrument.

6.4.5 Clean Pneumatics

The calibration valve manifold and auxiliary valve manifold will require disassembling and cleaning. Ideally the valves and the manifolds should be cleaned in a sonic bath with lab detergent and water. Once clean rinse with distilled water and dry with clean dry oil free air before reassembling (refer to Section 9.14, Section 9.15 and Section 9.19). A leak test on each assembly should be performed before adding the assembly back into the system. Once the system has been reassembled the instrument should have a full system leak check (refer to Section 6.4.4).

If the tubing shows signs of significant contamination, it should be replaced with new tubing (refer to Section 9.3 for tubing part number and Section 9.5 for tubing lengths).

6.4.6 Replacing the PMT Desiccant Pack

The PMT housing contains two desiccant packs to prevent condensation on the PMT cold block housing. If the desiccant expires it will result in corrosion and premature cooler failure. It is recommended that the desiccant bags be changed at least annually. If moisture is detected inside the housing or the desiccant packs are saturated the interval should be reduced. To change the desiccant packs follow the instructions below:

CAUTION

Because the PMT is extremely sensitive to light, it is essential that before opening the PMT assembly to make sure that the instrument is switched OFF.

In addition, even when the instrument is switched OFF it is very important to cover the PMT at all times so that no direct light reaches its window.

Equipment Required

- Phillips Head Screwdriver
- New Desiccant Packs
- Tweezers

Procedure

1. Turn the instrument OFF and disconnect the power. Wait 15 min for the cold block to warm up.

2. Using a Phillips head screwdriver, remove the desiccant pack access cap from the PMT housing.

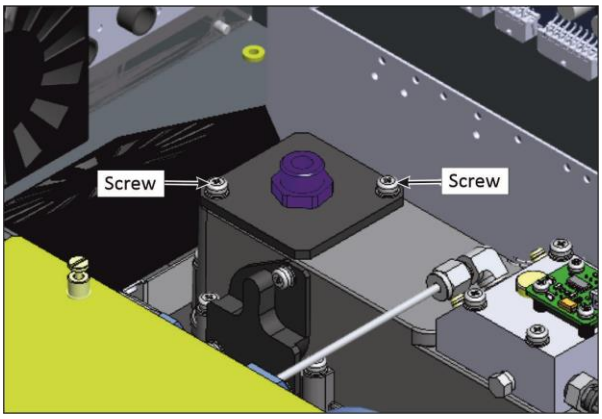

Figure 129 – Removing the Desiccant Pack

3. Remove the old desiccant packs and replace with new ones. Do not attempt to dry and reuse the old packs.
4. Inspect the inside of the PMT housing (by touch or with an inspection mirror) to check for moisture inside the housing. If moisture is detected inside the housing or the desiccant packs are saturated, the desiccant packs should be replaced more frequently.
5. Reinstall the desiccant cap by gently twisting and pressing the cap back into the PMT housing. It may help to apply a small amount of lubricant to the O-ring on the desiccant cap. Secure with two screws.

CAUTION

Do not attempt to use the fastening screws to push the desiccant cap in place in the PMT housing. This will damage the O-ring.

6. Reconnect power and restart the instrument.

6.4.7 Cleaning the Reaction Cell

As O_3 reacts with the contaminants in the air it will begin to deposit a film on the walls and optical bandpass filter within the reaction cell. This will result in decreased sensitivity of the instrument and increase the instrument gain required to take readings. The reaction cell should be cleaned periodically to remove deposits and restore sensitivity.

CAUTION

Take extreme care not to damage the pressure transducer assembly on top of the reaction cell.

Equipment Required

- Phillips Head Screwdriver
- Black Electrical Tape
- Sonic Bath or Alternatively Isopropanol Alcohol
- Clean Dry Oil Free Compressed Air

- Oven or Heat Gun
- Spare Parts or Annual Maintenance Kit

Procedure

1. Prepare and cut three pieces of black electrical tape approximately 5 cm in length and layer them approximately 3 cm wide. Keep these near your work area as we will use this immediately to protect the PMT as the reaction cell is being removed.

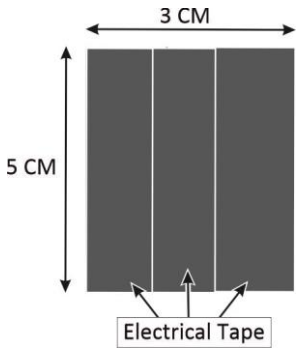

Figure 130 – Electrical Tape

2. Turn OFF the instrument, wait fifteen minutes for the cold block in the PMT assembly to warm up to prevent condensation.
3. While the cold block is warming up allow the vacuum pump to purge the instrument for five minutes then turn OFF the vacuum pump and allow the instrument to return to ambient.

CAUTION

Because the PMT is extremely sensitive to light, it is essential that before opening the PMT assembly to make sure that the instrument is switched OFF. Once the instrument is switched OFF it is very important to cover the PMT at all times so that no direct light reaches its window.

4. Disconnect the electrical and pneumatic fittings from the reaction cell.
5. Remove the four screws that secure the reaction cell to the measurement cell.

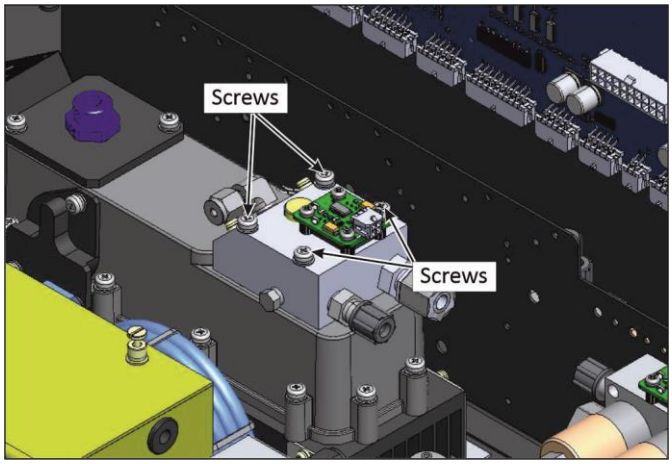

Figure 131 – Remove Reaction Cell

6. Remove the reaction cell and immediately cover the PMT window on the measurement cell.

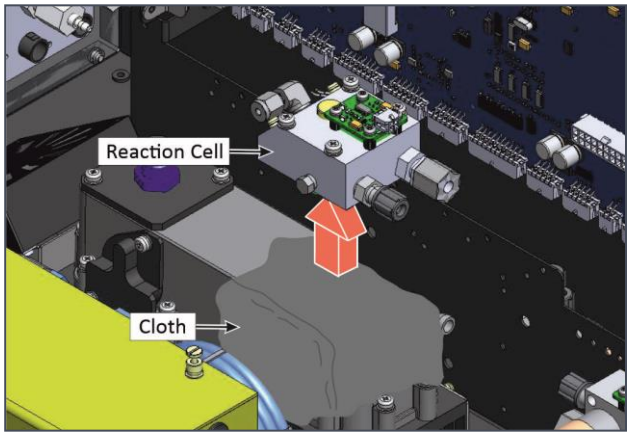

Figure 132 – Cover the PMT Window

7. Cover the PMT window with black electrical tape without removing the cloth.

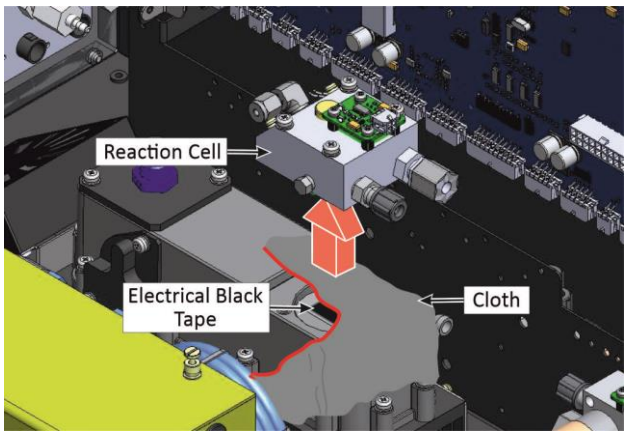

Figure 133 – Place the Black Electrical Tape

8. Turn the reaction cell upside down and remove the four screws fastening the optical bandpass filter cover (refer to Figure 134).

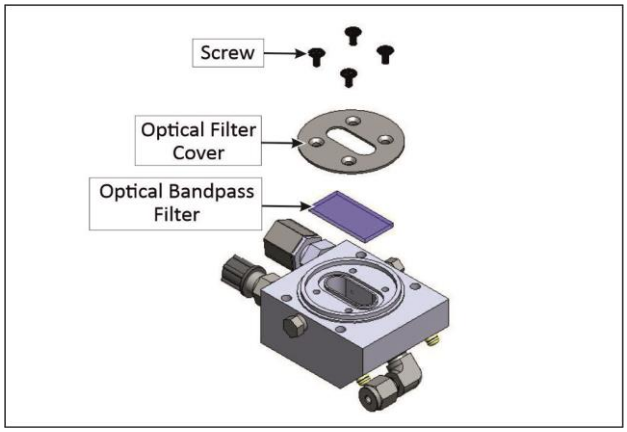

Figure 134 – Optical Bandpass Filter Removal and Cleaning

9. Clean the filter with a lint free tissue with distilled water if further cleaning is required use high purity isopropyl alcohol.
10. Dismantle the reaction cell and clean all the stainless steel parts with high purity isopropyl alcohol. Then wash in an ultra-sonic bath with lab detergent and water.
11. Blow out all the liquid with clean oil free compressed air and dry by gently heating the assembly.
12. Replacing the 3 sintered filters and reassemble the reaction cell, (refer to Section 9.13) and test for leaks.
13. Remove the black electrical tape without removing the cloth.
14. Remove the cloth and immediately replacing the reaction cell.

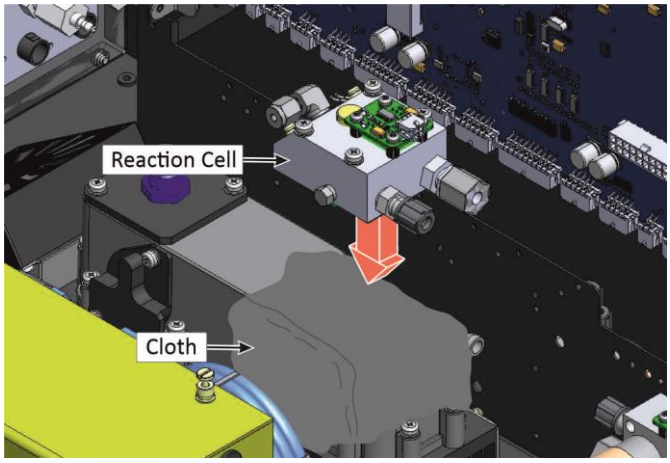

Figure 135 – Replace Reaction Cell

15. Perform a full system leak test (refer to Section 6.4.4).
16. Run a span point and calibrate the instrument.

6.4.8 Ozone Generator Maintenance

Ozone production in the Serinus 40 is achieved via a corona discharge method. Ambient air is drawn through a DFU and a Nafion dryer into the Ozone generator. High levels (≈6,000 ppm) of Ozone are produced.

CAUTION

Risk of electric shock. Do not power assembly during maintenance procedures.

Equipment Required

- Phillips Head Screwdriver
- Ozone Generator Retrofit Kit (PN: H011134)
- Ecotech Tygon Tubing (PN: T010011)

Procedure

1. Turn OFF the instrument and vacuum pump, allow the instrument to return to ambient pressure.

2. Open the lid and locate the Ozone Generator (refer to Figure 2 for location). Disconnect the Ecotech tubing leading into and out of the assembly.
3. Remove the 3 screws (refer to Figure 136) and lift the complete assembly from the instrument while at the same time disconnecting the assemblies power connector underneath from the main loom as you go.

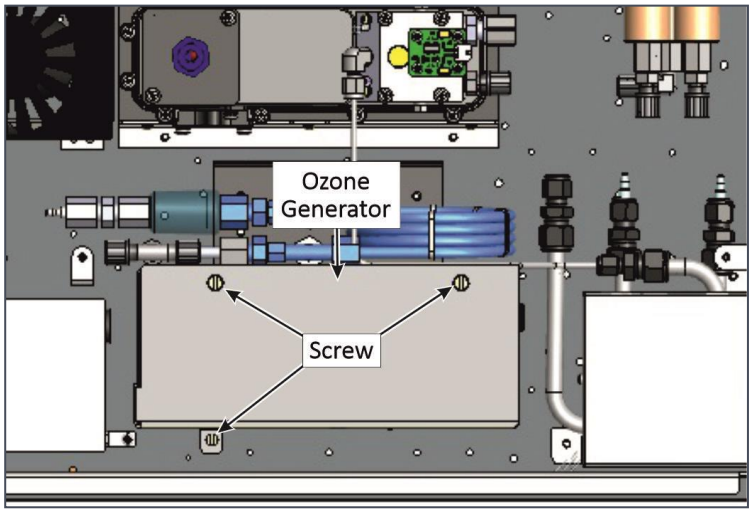

Figure 136 – Remove Ozone Generator from Instrument

4. Inspect the Ecotech tubing and replace if damaged or contaminated.
5. The Ozone generator PCA needs to be removed from the metal housing to get access underneath. Disconnect the power connector and remove 4 Phillips screws from the underside of the mounting.

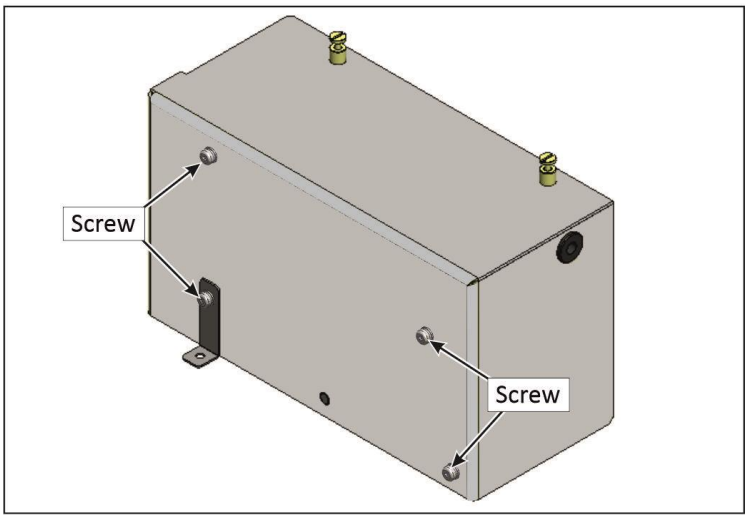

Figure 137 – Remove the Screw

6. With the PCA now free remove the screw (refer to Figure 138).

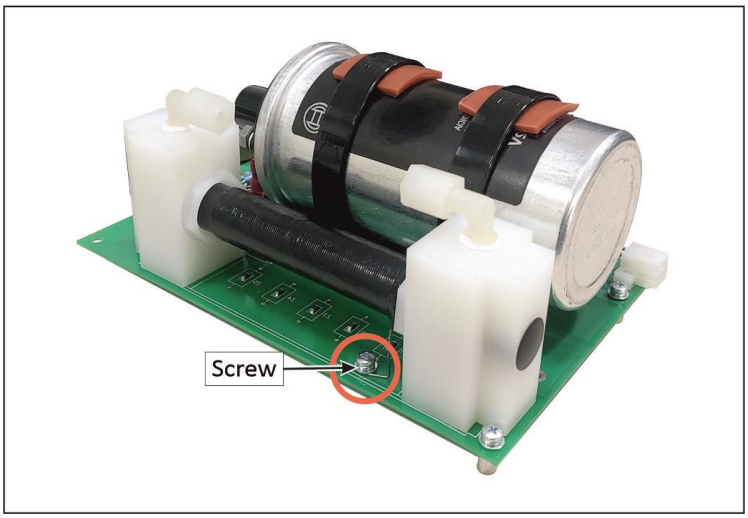

Figure 138 – Remove the Screw

7. Remove the white tube block fastening screws.

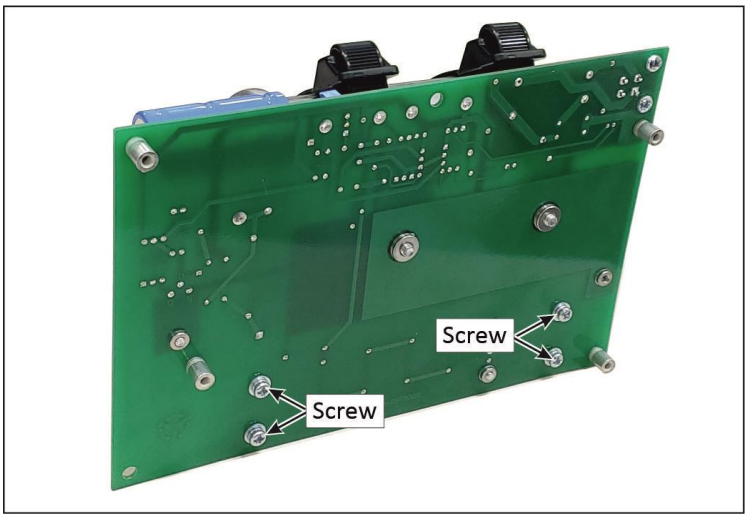

Figure 139 – Remove White Tube Block Fastener

8. Remove the plug (refer to Figure 140, callout - 1) and dismantle the nut (refer to Figure 140, callout - 2) from both the end.

9. Disassemble glass tube (refer to Figure 140, callout - 7).

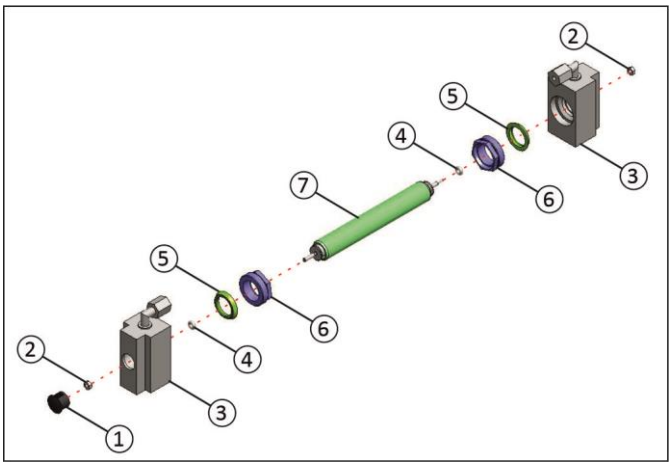

Figure 140 – Disassemble Glass Tube

10. Clean or replace the glass tube and replace the Teflon tube ferrule.
11. Reassemble in the reverse order.
12. Before installing into the instrument perform a leak check to ensure the Ozone generator assembly is not leaking.
13. Install the Ozone generator assembly into the instrument. Turn ON the instrument and vacuum pump and wait for the warm-up sequence to complete.
14. Perform a full system leak check (refer to Section 6.4.4).
15. Perform a zero and span calibration.

6.4.9 Pressure Sensor Check

Pressure checks are needed to ensure that the pressure sensor is accurately measuring pressure inside the instrument.

During normal operation ensure that the **Pressure & Flow Menu** indicate the following parameters. Ambient should display the current ambient pressure at site. Cell should indicate current cell pressure depending on the pump condition and location. A cell pressure of between 50 torr and 200 torr is recommended. The manifold pressure is normally about 20 torr below ambient.

Equipment Required

- Barometer
- Digital Multimeter (DMM)

Procedure

1. Open - **Main Menu → Analyser State Menu → Pressure & Flow Menu**.
2. Turn OFF the vacuum pump and allow the instrument to return to ambient.
3. Disconnect all external tubing connected to the rear ports of the instrument.

4. After two - five minutes observe the pressure readings: ambient, cell and manifold. Ensure that they are reading the same ± 3 torr (± 0.4 kPa).
5. If the readings are outside this level, perform a pressure calibration (refer to Section 5.2).

If the calibration fails, the instrument may have a hardware fault. The cell pressure PCA and the manifold pressure PCA have test points. To determine if the pressure sensor is faulty simply measure the voltage on the test points, refer to Figure 141, Figure 142 and Figure 143. The voltage measured across the test point is proportional to the pressure measured by the sensor, so if the sensor is exposed to ambient pressure at sea level, then the voltage will be around 4 volts but if the sensor is under vacuum the voltage will be low (for example, 0.5 volts). If the test point measures zero or negative voltage the assembly is most likely faulty and will need to be replaced.

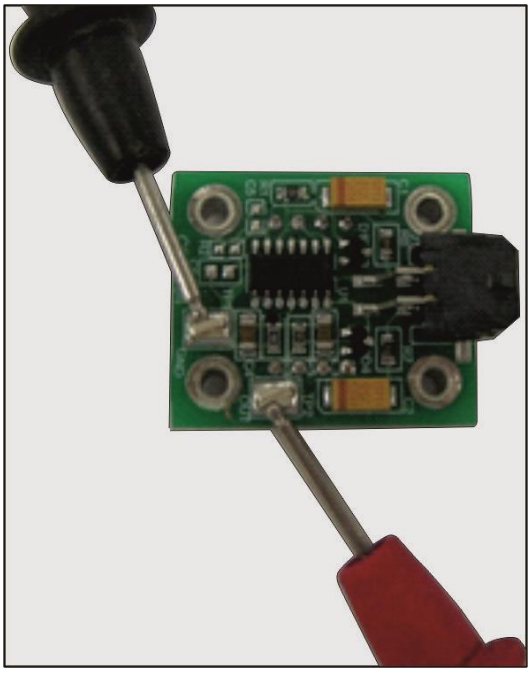

Figure 141 – Test Point Location

Figure 142 – Typical Test Point Reading of Cell Pressure with Vacuum Connected to Exhaust Port

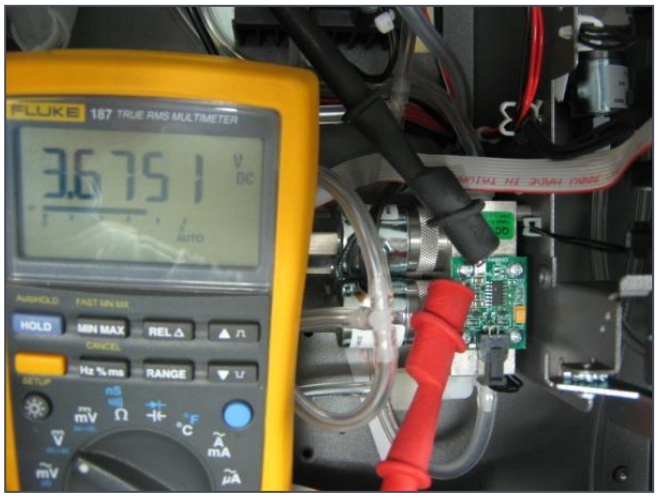

Figure 143 – Typical Test Point Reading of Manifold Pressure Sensor

6.5 Bootloader

The Serinus Bootloader is the initial set of operations that the instruments' microprocessor performs when first powered up (similar to the BIOS found in a personal computer). This occurs every time the instrument is powered up or during instrument resets. Once the instrument boots up, it will automatically load the instruments' firmware. A service technician may need to enter the Bootloader to perform advanced microprocessor functions as described in the following sections.

To enter the Bootloader turn OFF the power to the instrument. Press and hold the plus key while turning the power ON. Hold the Plus key until the following screen appears.

```
** Ecotech Serinus Analyser **
V3.1 Bootloader
Press '1' to enter Bootloader
```

If the instrument displays the normal start up screen, the power will need to be toggled and another attempt will need to be made to enter the Bootloader. Once successful, press 1 on the keypad to enter the **Bootloader Menu**.

6.5.1 Display Help Screen

Once in the Bootloader screen it is possible to redisplay the help screen by pressing 1 on the keypad.

6.5.2 Communications Port Test

This test is very useful for fault finding communication issues. It allows a communication test to be carried out independent to any user settings or firmware revisions.

This command forces the following communication ports to output a string of characters: Serial Port RS232 #1, USB rear and Ethernet Port. The default baud rate is 38400 for the RS232 Serial Port. Initiate the test by pressing 2 on the keypad from the bootloader screen.

6.5.3 Updating Firmware

It is important for optimal performance of the instrument that the latest firmware is loaded. The latest firmware can be obtained by visiting Ecotech's website:

http://www.ecotech.com/downloads/firmware

Or by emailing Ecotech at service@ecotech.com or support@ecotech.com

To update the firmware from a USB memory stick, use the following procedure:

USB Memory Stick Update

1. Turn the instrument OFF.
2. Place the USB memory stick with the new firmware (ensure that firmware is placed in a folder called FIRMWARE) in the front panel USB Port.
3. Enter the Bootloader (refer to Section 6.5).
4. Select option 3 (upgrade from USB memory stick), press 3 on the keypad.
5. Wait until the upgrade has completed.
6. Press 9 on the keypad to start the instrument with new firmware.

6.5.4 Erase All Settings

This command is only required if the instrument's firmware has become unstable due to corrupted settings. To execute this command enter the **Bootloader Menu** (refer to Section 6.5) and press 4 on the keypad.

6.5.5 Start Analyser

The start analyser command will simply initiate a firmware load by pressing 9 on the keypad from the **Bootloader Menu**. It is generally used after a firmware upgrade.

7. Troubleshooting

Before troubleshooting any specific issues, Ecotech recommends ensuring the instrument has successfully completed its warm-up routine and all issues listed in the instrument status menu are resolved (refer to Section 3.4.4).

Table 9 – Troubleshoot List

Error Message/Problem	Cause	Solution
Flow fault	Multiple possibilities	Refer to Section 7.1.
	Pump failed	Replace the internal or external pump.
	Blocked filter or orifice	▪ Determine cause of the flow fault. ▪ If fault is sintered filter replace. ▪ If fault is orifice clean or replace. Refer to Section 9.14.
	Pressurised measurement cell	Ensure sample and zero inlets are maintained at ambient pressure (vented to atmosphere)
	Pressure sensors	Perform a pressure calibration (refer to Section 5.2). Or replace if required.
Noisy/unstable readings	Multiple possibilities	Refer to Section 7.2.
	Calibration system error	Ensure calibration system is functioning correctly and is leak free. Ensure sufficient gas is available for the instrument and an adequate vent is available for excess gas.
	Leaks	A leak in the instrument or calibration system dilutes the sample stream and causes low span readings and noise.
	TE cooler, reaction cell heater or converter heater	A failed temperature control allows the instrument to drift with ambient temperature. Verify the following Cell temperature is 50 °C ± 3 °C Cooler temp is 13 °C ± 2 °C Converter temperature is 325 °C ± 5 °C.
	Hardware fault	Faulty measurement cell component.
	Gain too high	Leak check (refer to Section 6.4.4). Background Port flow too high > 130 cc/min. Service instrument. PMT voltage too low less than 640 V. Optical bandpass filter in reaction cell contaminated requires cleaning (refer to Section 6.4.7).

	Cell pressure too high (> 280 torr)	Leak check (refer to Section 6.4.4). Replace external pump. Background Port flow too high > 130 cc/min. Service instrument. Recalibrate pressure sensors.
	PMT temperature too high (> 15 °C)	Check PMT assembly fan is operating. Check PMT cooler is operational and correct amount of thermal paste is applied.
	Unstable Ozone generator	Ensure Ozone generator is ON in the service menu. If the generator will not turn ON, check converter temperature and vacuum readings. Once the Ozone generator is ON, check that 12 V is supplied to the generator connector. If 12 V is being supplied to the generator, try substituting the Ozone generator with a known working generator. If the instrument now works replace the faulty Ozone generator.
Converter temp failure	Faulty heater or temperature sensor	Refer to Section 7.3.
Flow block temperature failure	Faulty heater or temperature sensor	Refer to Section 7.4.
Reaction cell temperature failure	Faulty heater or temperature sensor	Refer to Section 7.5.
Instrument resetting	Multiple possibilities	Check that the instrument is not overheating. Possibly a faulty power supply. Corrupted firmware. Perform 'erase all settings' in the **Bootloader Menu** and reload or upgrade firmware (refer to Section 6.5.4).
12 Voltage supply failure	Power supply has failed	Replace power supply.
No display	AC power	Verify that the mains power cable is connected and the chassis fan is operating.
	Contrast adjustment required	Adjust the display contrast by pressing either of the scrolling buttons on the front panel: Press up scrolling button (⮝) for darker contrast. Press down scrolling button (⮟) for lighter contrast.
	DC power	Verify that the power supply is providing +12 VDC, -12 VDC and +5 VDC on test point TP40, TP23 and TP41 on the main controller PCA.
	Display	Check the interface cable between the display and the main controller PCA.
	Bad display or main controller PCA	Replace the front panel display. Replace the main controller PCA.

		Bad cables are unlikely, but if you suspect it perform a pin-for-pin continuity test using an ohmmeter.
Sample pressure too high or too low	Loss of pressure calibration	Ensure particulate filter has been recently changed. Ensure tubing is not kinked or blocked. Ensure vacuum pump is correctly installed and operating. Perform a pressure calibration (refer to Section 5.2).
Sample flow not at 0.6 slpm	Multiple possibilities	Check/replace sample filter Check pump Check valves Check/replace sintered filter Calibrate pressure sensors (refer to Section 5.2)
Unstable flow or pressure readings	Faulty pressure sensors	Check pressure transducer calibration. Check calibration valve block is functioning and not blocked. If unable to diagnose problem, check voltage across TP1 and TP2 of manifold pressure PCA ensure it is about 4 V ± 0.5. Check voltage across TP1 and TP2 of the cell pressure PCA (with vacuum connected) ensure it is about 1 V ± 0.5. If unable to diagnose problem it may be a noisy A/D converter, replace main controller PCA.
Low span	Leaks	A leak in the instrument or calibration system dilutes the sample stream and causes low span readings and noise. Leak check (refer to Section 6.4.4).
	Span calibration out	Adjust the span using the calibration procedure (refer to Section 5.4).
No response to span gas	Leaks/blockages	Leaks or blockages in tubes or valves. Perform leak check and flow check and repair any leaks/blockages.
	Faulty calibration source	Ensure calibration gas is plumbed correctly, is not contaminated, has no leaks and is a certified reference gas.
	Hardware fault	Faulty PMT assembly or Ozone generator.
Zero drift	Not enough zero air supplied	Check calibrator excess flow is sufficient.
	Faulty zero air	Ensure zero air source is not overly polluted.
	Leak	Leak check (refer to Section 6.4.4).

7.1 Flow Fault

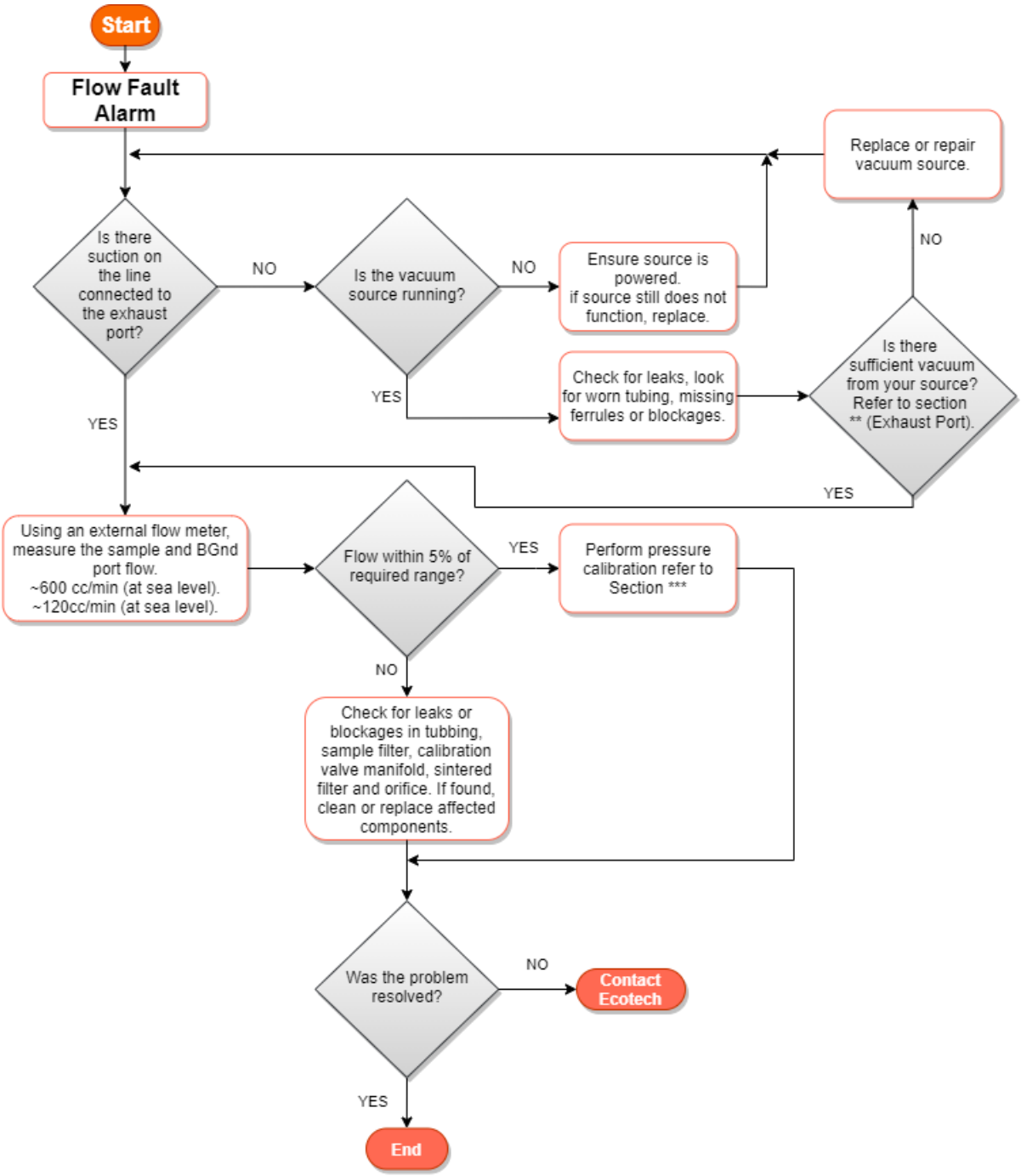

Figure 144 – Flow Fault Diagnostic Procedure

** Section 2.3.2

*** Section 5.2

7.2 Noisy/Unstable Readings

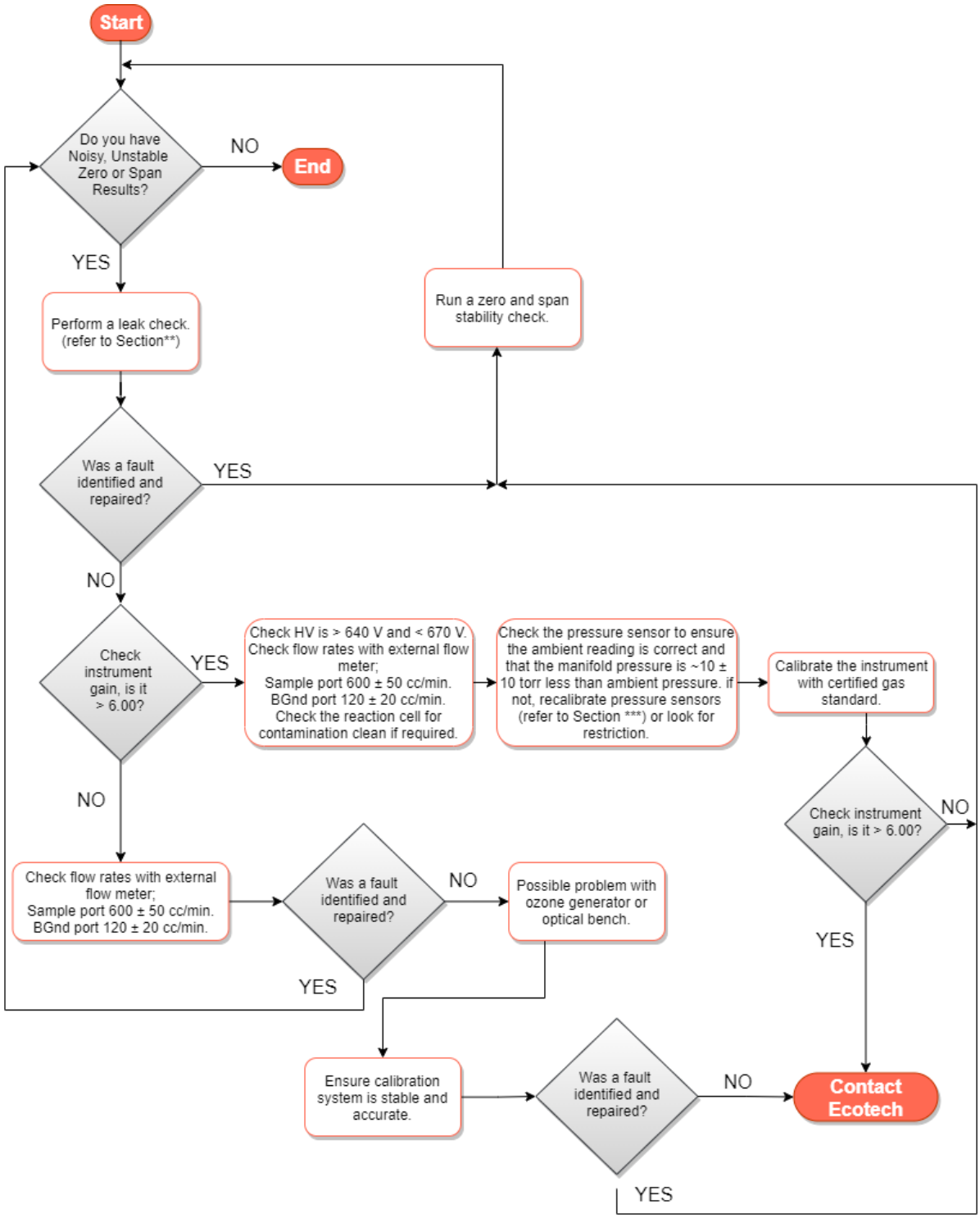

Figure 145 – Noisy or Unstable Readings Troubleshooting Flow Chart

** Section 6.4.4

*** Section 5.2

7.3 Converter Temperature Failure

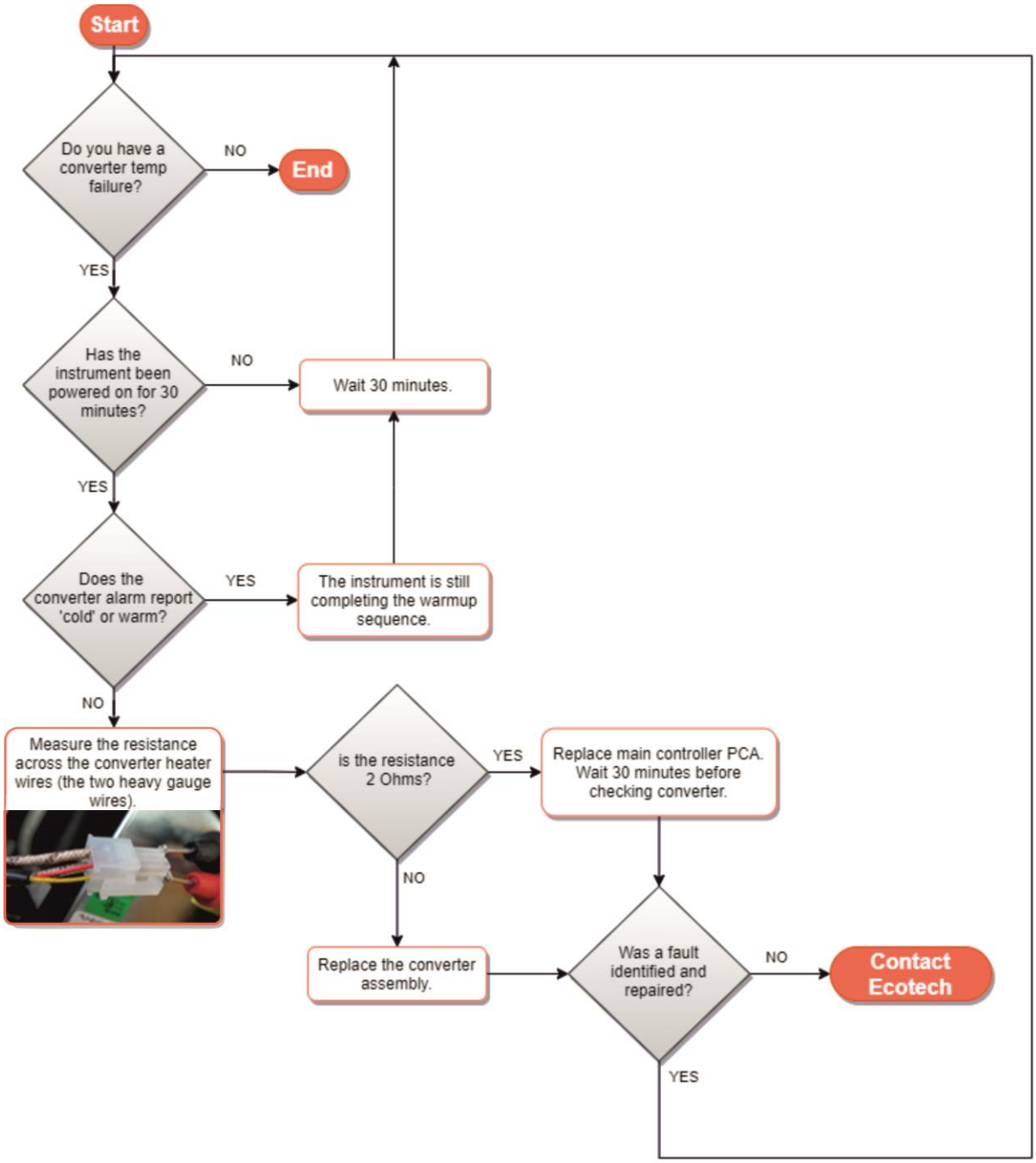

Figure 146 – Converter Alarm Troubleshooting Flow Chart

7.4 Auxiliary Valve Manifold Temperature Failure

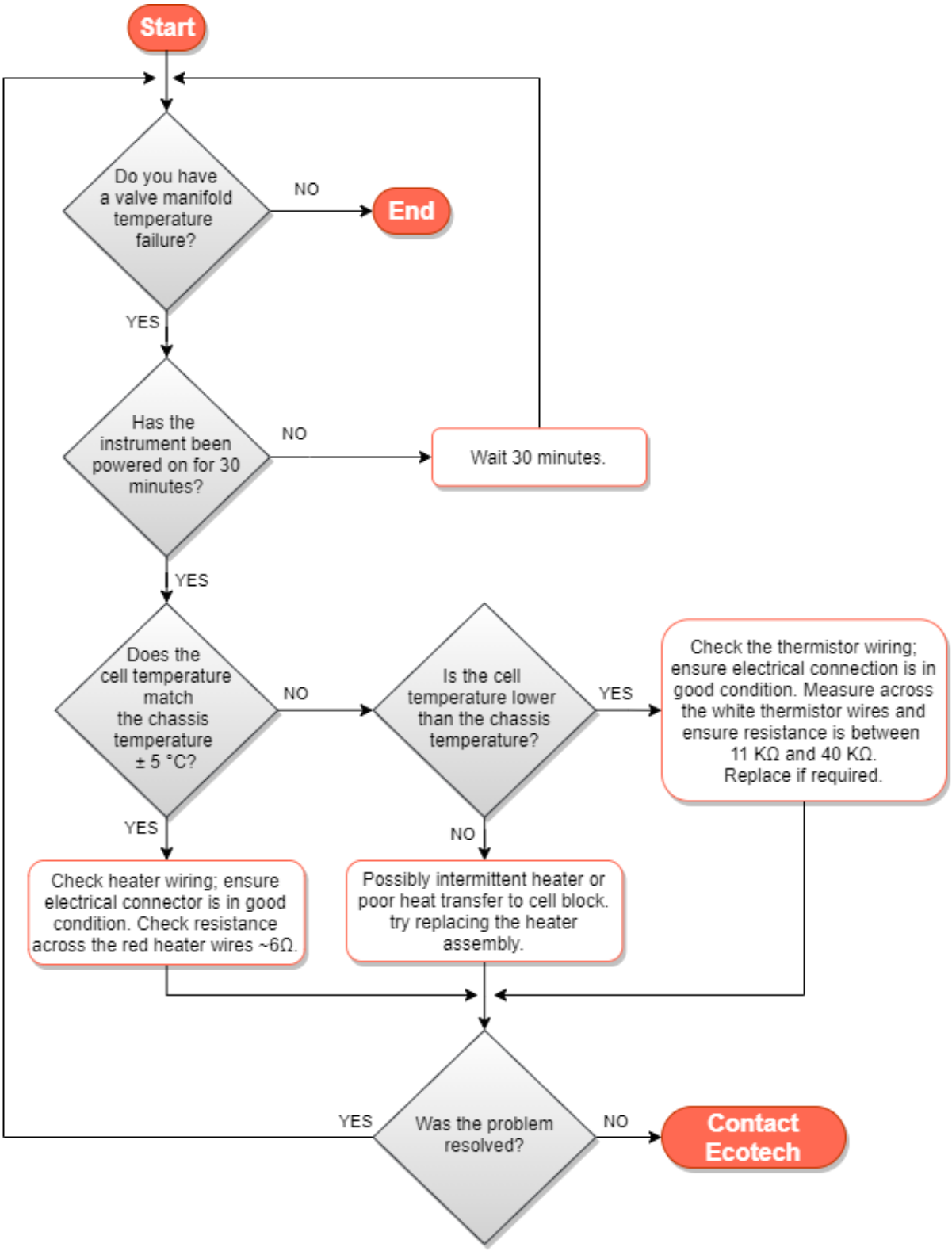

Figure 147 – Valve Manifold Temperature Alarm Troubleshooting Flow Chart

7.5 Reaction Cell Temperature Failure

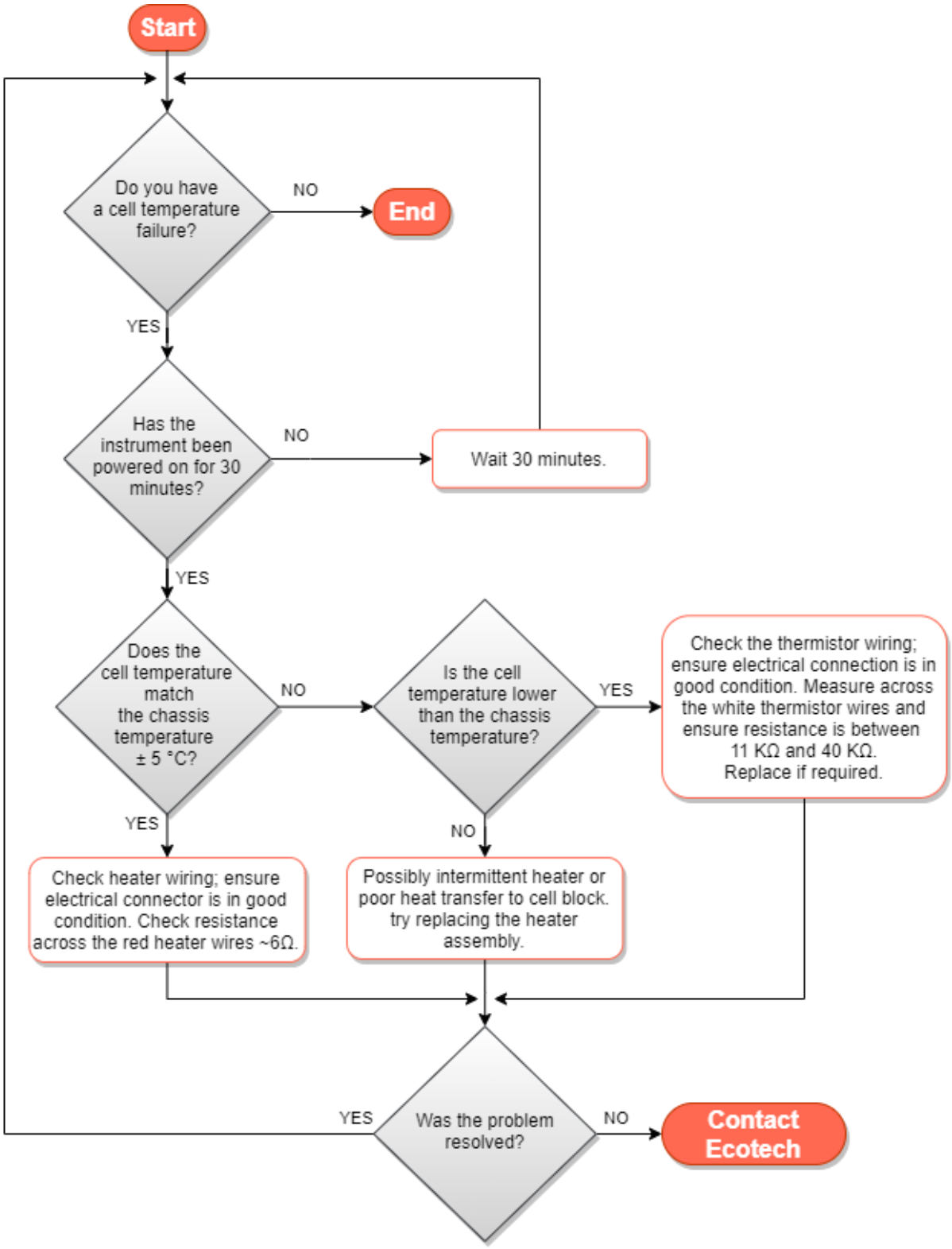

Figure 148 – Reaction Cell Temperature Failure Troubleshooting Flow Chart

7.6 USB Memory Stick Failure

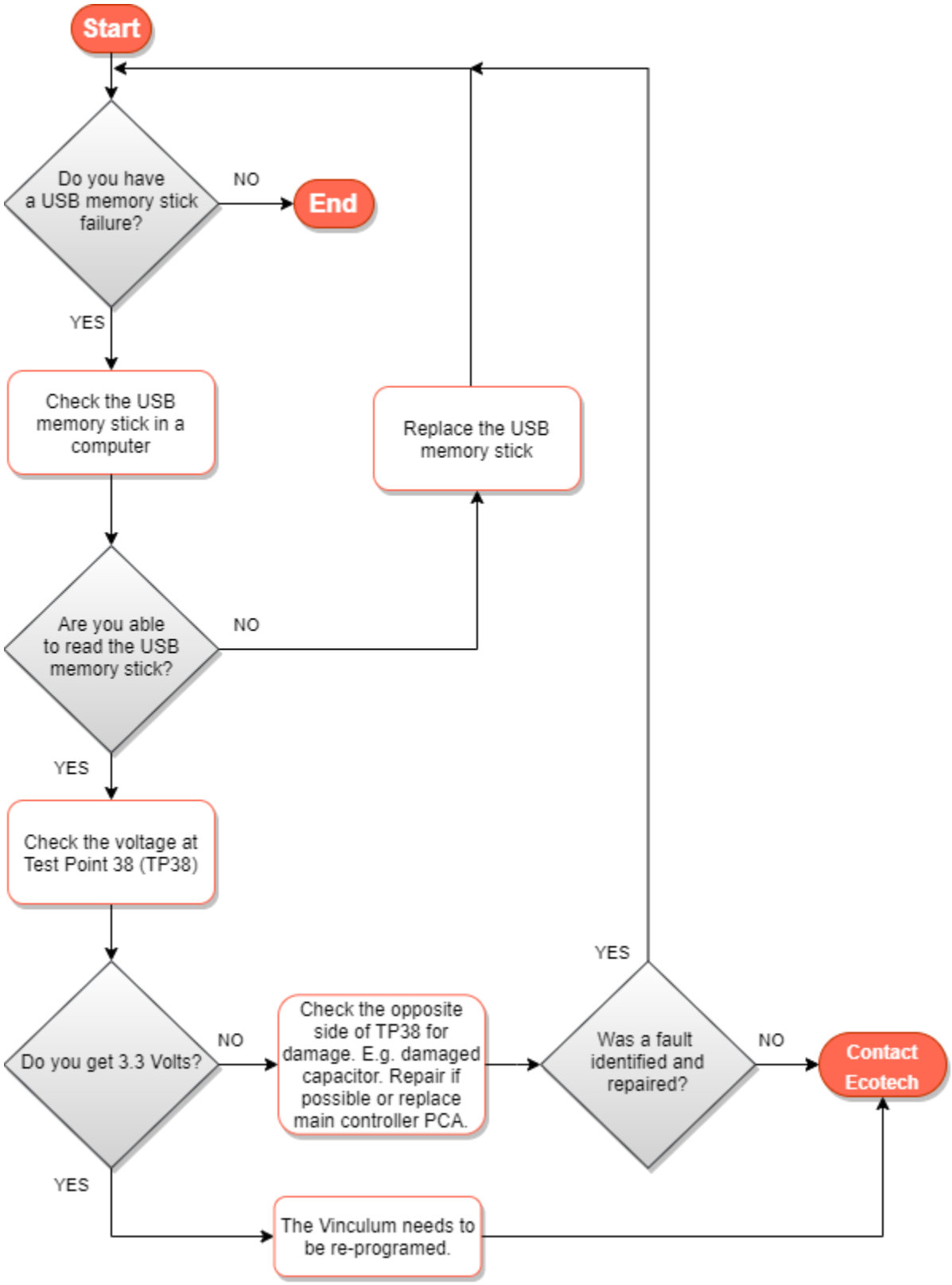

Figure 149 – USB Memory Stick Failure

7.7 Ecotech Service Support Files

Regular backup of the settings, parameters and data on the instruments USB memory stick is recommended.

In the event of a fault that requires Ecotech technical support, make copies of the following files and email to: **support@ecotech.com**

Equipment Required

- PC/Laptop

Procedure

State the ID number, model, board revision and firmware version of the instrument with a brief description of the problem. Take a copy of the current configuration if possible and a save of the parameters.

1. Open - **Main Menu → Analyser State Menu**.
2. **Model** - (take note).
3. **Ecotech ID** - (take note).
4. **Board Revision** - (take note).
5. **Firmware Ver.** - (take note).
6. Open - **Main Menu → Service Menu**.
7. Save - **Save Configuration** - (CONFIG**.TXT) - Accept.

Note: CONFIG99.TXT is the "Factory Backup" file, this is the configuration of the instrument as it left the factory. It is recommended that this file is kept unchanged but can be used as a reference backup point.

** Can be any number from 0 – 98.

8. Save - **Save Parameter List** - (PARAM**.TXT) - Accept.
9. Eject - **Safely Remove USB Stick** - (Follow instructions).

Note: PARAM99.TXT is the "Factory Backup" file, this is a snap shot of the parameters while it was under test in the factory just prior to release. It is recommended that this file is kept unchanged but can be viewed for reference.

** Can be any number from 0 – 98.

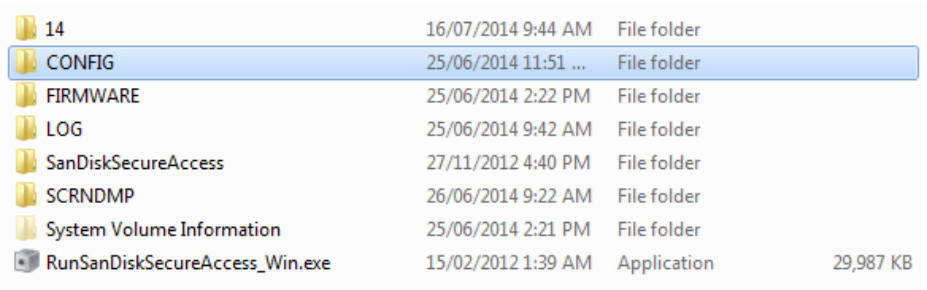

14	16/07/2014 9:44 AM	File folder	
CONFIG	25/06/2014 11:51 ...	File folder	
FIRMWARE	25/06/2014 2:22 PM	File folder	
LOG	25/06/2014 9:42 AM	File folder	
SanDiskSecureAccess	27/11/2012 4:40 PM	File folder	
SCRNDMP	26/06/2014 9:22 AM	File folder	
System Volume Information	25/06/2014 2:21 PM	File folder	
RunSanDiskSecureAccess_Win.exe	15/02/2012 1:39 AM	Application	29,987 KB

Figure 150 – USB Memory Stick File Structure

10. Insert the USB memory stick into a PC/Laptop computer and access the files.
11. Best practice is to email all the on the USB memory stick but if it's to large just send:
12. The CONFIG**.TXT and PARAM**.TXT files that are saved in the CONFIG folder.
13. The LOG files (Event Log text files) and data files (14=Year, Sub folder=month).
14. Safely Eject the USB from the PC/Laptop and return to the instrument.

This page is intentionally blank.

8. Optional Extras

This section contains information on optional kits and installed options.

Dual Sample Filter	Refer to Section 8.1.
Test Lamp	Refer to Section 8.2.
Network Port	Refer to Section 8.3.
Sample Dryer	Refer to Section 8.4.
Rack Mount Kit	Refer to Section 8.5.
Internal Pump	Refer to Section 8.6.
Metric Fittings Kit	Refer to Section 8.7.
High Pressure Zero/Span Valves	Refer to Section 8.8.
High Level Instrument	Refer to Section 8.9.
Internal Zero and Span	Refer to Section 8.10.
Trace Level Instrument	Refer to Section 8.11.

8.1 Dual Sample Filter (PN: E020100)

The dual filter is designed with two sample filters plumbed in parallel with a split line. This formation allows sample flow not to be affected, yet reduces the loading on each filter and therefore the frequency with which they will need to be changed.

Table 10 –Dual Sample Filter Parts Added

Part Description	Quantity	Part Number
Sample Filter Holder	1	H010160
1/4T Union Tee Fitting	2	F030210-01
1/4T Suit Compression Ferrule	6	F030203-01
1/4T Compression Fitting Nut	6	F030202-01

The dual filter option is shown in the pneumatic diagram (dashed line) and requires no operational changes to the instrument (refer to Section 9.5).

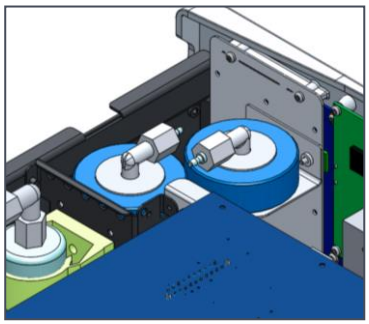

Figure 151 – Dual Filter Option Installed

8.2 Test Lamp (PN: E020103)

The test lamp can be used to diagnose a problem within the measurement cell specifically the function of the PMT. The test lamp is used in the M**ain Menu → Service Menu → Diagnostics Menu → Digital Pots Menu** by changing the Diagnostic Mode to Optic (refer to Section 3.4.14). If you have this option installed you need to make sure it is enabled in the Hardware Menu before the feature can be used.

An example of using the Optic diagnostic feature is when running a span point if you get no response from the instrument the Optic diagnostic feature can be used to divide up the system and verify that the lack of response is not due to a failure of the measurement cell but more likely a failure of the Ozone generator or calibration system. If you get a response from the instrument regardless of the concentration then the PMT is functioning and can be ruled out as the cause of the problem.

Table 11 –Test Lamp Parts Added

Part Description	Quantity	Part Number
NO_x Test Lamp	1	C020068-01
Quartz Window	1	H010002

Table 12 – Test Lamp Parts Removed

Part Description	Quantity	Part Number
Test Lamp Plug	1	H010026

8.3 Network Port (PN: E020101)

The network port option allows the user to setup and connect to a range of TCP/IP network options. If the user has this option installed, they need to make sure it is enabled in the **Hardware Menu** before the feature can be used.

Table 13 – Network Port Parts Added

Part Description	Quantity	Part Number
Rear Panel PCA (Network Port)	1	C010002

Table 14 – Network Port Parts Removed

Part Description	Quantity	Part Number
Rear Panel PCA	1	C010002-01
Rectangular Blanking Plug	1	H010067

- Refer to Section 3.4.28, for details on the network menu.
- Refer to Section 4.3, for details on network setup.

8.3.1 Hardware Setup

This procedure will need to be followed after a factory reset.

Procedure

1. Press - (the green instrument status light button), this will take the user to the home screen.
2. Press - (-99+) on the keypad. This will open the **Advanced Menu**.
3. Open - **Advanced Menu → Hardware Menu**.
4. Enable - **Network Port → Enabled**.

8.4 Sample Dryer (PN: E020118)

The sample dryer reduces the measurement interference due to water vapour. To meet EN14211 this option must be selected. Refer to Section 9.9.

Table 15 – Sample Dryer Parts Added

Part Description	Quantity	Part Number
Sample Dryer Assembly	1	H011150

8.5 Rack Mount Kit (PN: E020116)

The rack mount kit is necessary for installing the Serinus into a 19” rack (the Serinus is 4RU in height).

Table 16 –Rack Mount Kit Parts Added

Part Description	Quantity	Part Number
Rack Slide Set	1	H010112
Rack Mount Adaptors	4	H010133
Rack Mount Ears	2	H010134
Spacers	4	HAR-8700
M6 x 20 Button Head Screws	8	-
M6 Washers	16	-
M6 Nyloc Nuts	8	-
M4 x 10 Button Head Screws	18	-
M4 Washers	8	-
M4 Nyloc Nuts	8	-
M6 Cage Nuts	8	-

Installing the Instrument

1. Remove the rubber feet from the instrument (if attached).
2. Refer to Figure 152. Separate the slide rail assembly by pressing the black plastic clips in the slide rails to remove the inner section of the rail.

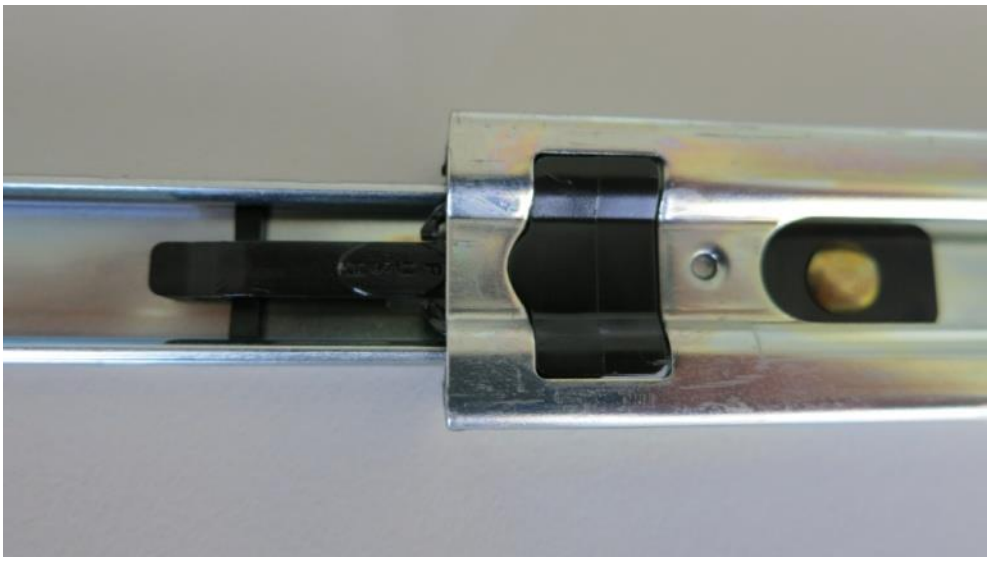

Figure 152 – Separate Rack Slides

3. Refer to Figure 153. Attach the inner slide rails to each side of the instrument using M4 x 10 button screws; three on each side.

Figure 153 – Assemble Inner Slide on Chassis

4. Refer to Figure 154. Install rack mount ears on the front of the instrument using two M4 x 10 screws on each side.

Figure 154 – Rack Mount Ears Fitted to Instrument

5. Refer to Figure 155.Attach the rack mount adaptors to the ends of the outer slide rails using M4 x 10 button screws, washers and locknuts. Do not fully tighten at this stage as minor adjustments will be required to suit the length of the rack.

Figure 155 – Attach Rack Mount Adaptors to Outer Slides

6. Test fit the rack slide into your rack to determine the spacing of the rack mount adaptors.

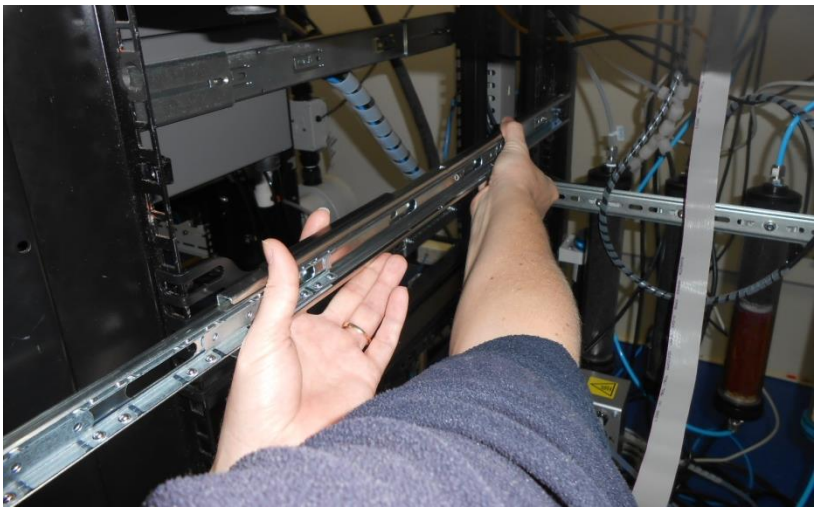

Figure 156 – Test Fit the Rack Slide Assembly into Your Rack

7. Refer to Figure 157. Install the two assembled outer slide rails onto the left and right side of the rack securely with M6 bolts; washer and locknuts/cage nuts.

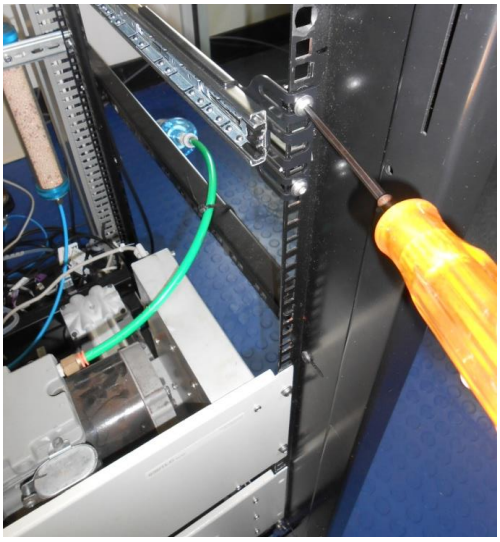

Figure 157 – Attach Slides to Front of Rack

8. Now carefully insert the instrument into the rack by fitting the instrument slides into the mounted rails. Ensuring that the rack slide locks engage on each side (you will hear a click from both sides).

CAUTION

When installing this instrument ensure that appropriate lifting equipment and procedures are followed. It is recommended that two people lift the instrument into the rack due to the weight, unless proper lifting equipment is available.

Note: Ensure both sides of the inner slide are attached to the outer slides before pushing into the rack fully.

9. Push the instrument into the rack. Adjust and tighten the screws as required to achieve a smooth and secure slide.

To Remove the Instrument

1. To remove the instrument first pull instrument forward of rack giving access to the slides.
2. Find the rack slide lock labelled **Push** and push it in whilst sliding the instrument out of the rack, complete this for both sides while carefully removing instrument.

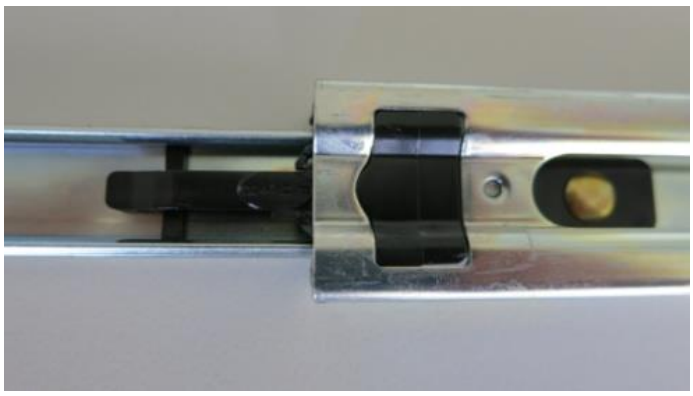

Figure 158 – Slide Clips

8.6 Internal Pump (PN: E020104)

8.6.1 Hardware Setup

This procedure should be followed after a factory reset.

Equipment Required

- NA

Procedure

1. Press - (the green instrument status light), to return to the home screen.
2. Press - (-99+) on the keypad. This will open the **Advanced Menu**.
3. Open - **Advanced Menu → Hardware Menu**.
4. Enable - **Internal Pump → Enabled**.

8.6.2 Internal Pump Additional Components

The Serinus 40 internal pump option includes the following additional components:

Table 17 – Internal Pump Additional Components

Part Description	Quantity	Part Number
Internal Pump	1	H011140
Internal Pump, Low Vacuum (Bypass)	1	H010027

Part Description	Quantity	Part Number
Flow Block Assembly	1	H013165
Flow Block Thermal Isolator	1	H010119
Stop Valve	2	H030170
Micro Wire Saddle	3	H030121
Pressure Sensor Cable	1	C020062-02
Heater and Thermistor Cable	1	C020083
Bypass Pump Cable Harness	1	C020158

8.6.3 Pressure Calibration Internal Pump Option

The internal pump requires a separate modified procedure to allow the internal pump to generate the necessary vacuum (refer to Section 5.2.3).

8.6.4 Leak Check Internal Pump Option

The internal pump requires a separate modified procedure to leak check the system (refer to Section 6.4.4.1).

8.6.5 Pump Control

This section describes how to turn OFF and ON the internal pump for servicing and maintenance purposes.

Procedure (Sample Pump)

1. Open - **Main Menu → Service Menu → Diagnostics Menu → Internal Pump Menu**.
2. Select - **Pump Control → Manual**.
3. Toggle OFF - **Internal Pump → Off**.

Procedure (Bypass Pump)

1. Open - **Main Menu → Service Menu → Diagnostics Menu → Internal Pump Menu**.
2. Select - **Bypass Pump Control → Manual**.
3. Toggle OFF - **Bypass Pump → Off**.

8.7 Metric Fittings Kit (PN: E020122)

The metric fittings kit allows the user to connect 6 mm tubing to the rear ports of the analyser. This can be very handy if it is hard to source ¼” tubing from a local supplier.

8.8 High Pressure Zero/Span Valves

High pressure span calibration valve (factory installed) PN: E020108

High pressure zero calibration valve (factory installed) PN: E020109

Note: Before using a high pressure span or zero as a source calibrating the instrument, check with the user local regulatory requirements.

Refer to Section 5.8 for operation of this installed option.

Refer to Section 9.21 for the exploded assembly drawing.

8.9 High Level Instrument (PN: E020113)

The Serinus 40 high level option (E020113) allows measurement at higher ranges (0 - 1000 ppm) with an LDL of 4 ppb.

8.9.1 High Level Specifications

The following tables list the changes to a standard instrument with the high level option installed.

Table 18 – High Level Instrument Parts Added

Part Description	Quantity	Part Number
1/4" - 1/8" PTFE Ferrule Reducing	2	F030031
Sample Filter Holder	1	H010160
Dual Coil NO_x Converter Assembly	1	H011105-01
High Level Optical Bandpass Filter	1	H011205-01
High Level Auxiliary Valve Manifold Assembly	1	H011300-01
Insulator, Mill Board 115 X 115 MM, 2 MM Thick	1	H060001

Table 19 – High Level Instrument Parts Removed

Part Description	Quantity	Part Number
NO_x Converter Assembly	1	H011105
NO_x Optical Bandpass Filter	1	H011205
Auxiliary Valve Manifold Assembly	1	H011300
Delay Loop	-	-

Changes to the instrument include:

- Lower sample flow rate: 0.17 slpm will be displayed in Sample Flow field.
- Exhaust pump should draw 0.52 slpm (0.352 slpm total sample flow).

- High Voltage Adjust pot set to approximately 125.

For a detailed pneumatic diagram refer to Section 9.7.

8.9.1.1 Measurement

Range

0 - 1000 ppm NO_x (autoranging)

0 - 150 ppm NO_2 (autoranging)

Lower Detectable Limit

50 ppb, with Kalman filter active

8.9.1.2 Precision/Accuracy

Linearity

± 1% of full scale

Response Time

<60 seconds

Noise at Zero

Zero noise < 25ppb

Noise at Span

Span noise < 0.1% of reading or 75 ppb, whichever is greater

8.9.1.3 Calibration

Zero Drift

24 hours: < 40 ppb

Span Drift

24 hours: < 1.0 % of reading or 1 ppm, whichever is greater

8.10 Internal Zero and Span (PN: E020134)

The Serinus 40 Internal Zero and Span (IZS) option is a permeation device used for checking the response of the Serinus 40 at zero and one span point. This is achieved using the following:- permeation oven, permeation tube, constant vacuum and a source of zero air (zero air scrubber connected to the BGnd Air Port).

Air is drawn at 1 slpm through an external zero air scrubber connected to the BGnd Air Port. When the internal zero mode is active, the IZS calibration valve manifold's valves change to allow the zero air to be drawn through the measurement system. When the internal span mode is active, the IZS calibration valve manifold's valves change to allow the zero air to pass by the permeation tube in the permeation

oven. This generates the span gas that is then drawn through the measurement system. The permeation oven temperature is controlled by the main controller PCA, while the sample and purge flow for the permeation oven is sourced from the vacuum supplied to the Exhaust port of the instrument.

The output concentration of the permeation tube is displayed in the Calibration Menu as the menu item Perm Conc. The Perm Conc concentration is calculated from the user editable fields Perm Rate, Perm Flow and Perm Tube Oven located in the Hardware Menu. These menu items must be setup by the user for the concentration value to be calculated and displayed correctly.

Note: It is important that as long as the permeation tube is installed in the permeation oven a constant vacuum is supplied to the instrument.

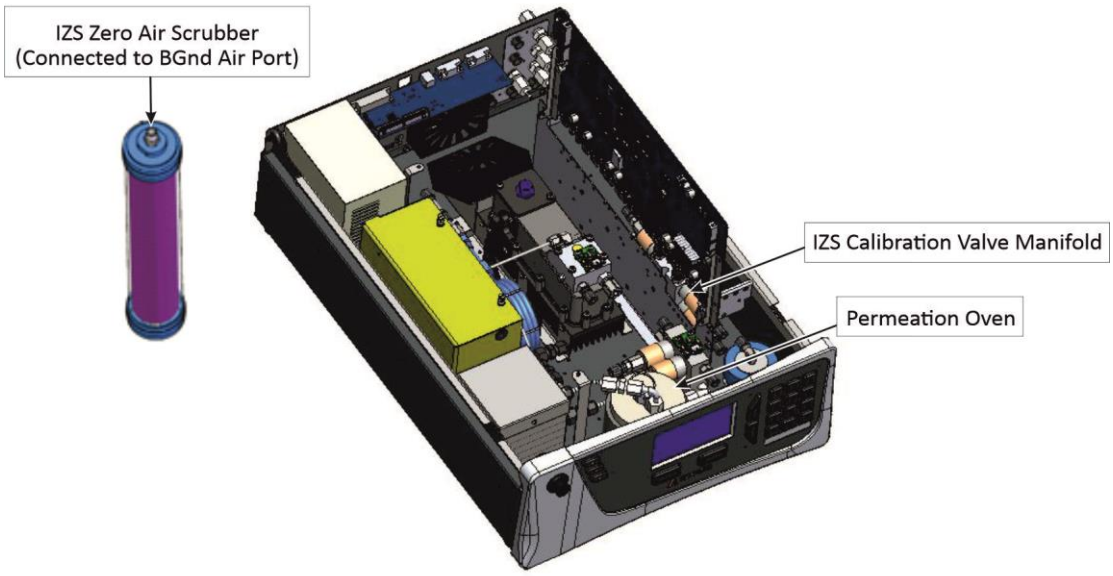

Figure 159 – IZS Specific Internal Components Diagram

8.10.1 IZS Specifications

The following tables lists the changes to a standard instrument with the IZS option installed.

Table 20 – IZS Parts Removed

Part Description	Quantity	Part Numbers
Calibration Valve Manifold Assembly	1	H010013-01

Table 21 – IZS Parts Added

Part Description	Quantity	Part Number
IZS Heater Cable for Permeation Oven	1	C020092
DFU Filter, 23 Micron	1	F010005
Kynar Male Connector Fitting 1/4T, 1/8 NPT	1	F030020

Part Description	Quantity	Part Number
1/4" PTEF Straight Ferrule	1	F030028
Nut 1/4T Steel Gripper Fitting	1	F030029
Fitting, KYNAR Union Tee	1	F030034-02
Compression Fitting Nut	6	F030202-01
1/4T Ferrule	6	F030203-01
1/4T Tee Union Fitting	2	F030210-01
1/4" to 1/8" Adaptor Fitting	4	H010007
3ML Orifice With O-ring Groove	1	H010043-01
IZS Calibration Valve Manifold Assembly	1	H010056
IZS Permeation Oven Assembly	1	H012170
O-ring, 5/32 ID X 1/16 W	1	O010013
Zero Air Scrubber Kit	1	H011160

8.10.1.1 Permeation Oven

Output Concentration

Concentration will vary depending on permeation tube selected

Dilution Flow

0.680 ml/min ± 130 ml/min

Temperature Range

50 °C ± 3 °C

Permeation Chamber Size

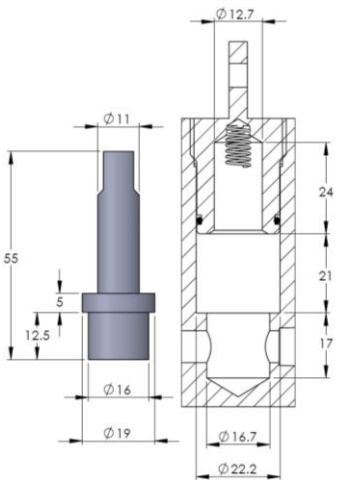

Figure 160 – Typical Permeation Tube and Chamber Dimensions (Units in mm)

8.10.1.2 Power

Power Consumption

285 VA max (typical at start up)

190 VA after warm up

8.10.1.3 Physical Dimensions

Weight

24.5 Kg

8.10.2 IZS Setup

This section of the manual runs through the requirements to consider when selecting a permeation tube as well an initial hardware setup for the calibration device to function correctly.

8.10.2.1 Selecting a Permeation Tube

The permeation oven fits "Wafer Device" type permeation tubes with ~46 mm of active material length and ~16 mm outer diameter. Total housing length of the permeation tube is around ~55 mm x 19 mm.

Ecotech recommends sourcing your permeation tube from a local supplier. Remember to confirm your desired accuracy (± 10% or ± 25%) when ordering. Permeation tubes are specified with a nominal value ± 10% - 25%. This means that if a perm tube is ordered with a permeation rate of 1080 ng/min, it can be as low as 810 ng/min or as high as 1350 ng/min. This does not mean the value will fluctuate by that much, but the actual value observed from the permeation tube can vary as much as 25% from the ordered value. Once installed and setup, perm tubes typically remain within 3% of their set value.

8.10.2.2 Hardware Setup

This procedure should be followed after a factory reset or during the installation of a new permeation tube.

Equipment Required

- Flow meter

Procedure

1. Press - (the green instrument status light), this will take you to the home screen.
2. Press - **(-99+)** on the keypad. This will open the **Advanced Menu**.
3. Open - **Advanced Menu → Hardware Menu**.
4. Enable - **IZS internal Span → Enabled**.
5. Disconnect the permeation oven inlet and connect a flow meter (you should read around 50 ml/min purge flow while in this mode).
6. Press - (the green instrument status light), this will take you to the home screen.
7. Open - **Main Menu → Calibration Menu**.
8. Select - **Zero Source → Internal**.

9. Select - **Span Source → Internal**.
10. Select - **Cal. Mode → Span**.
11. Record the reading on the flow meter as your "perm oven flow" (should be around 680 ml/min).
12. Select - **Cal. Mode → Measure**.
13. Reconnect the permeation oven inlet.
14. Press - (the green instrument status light), this will take you to the home screen.
15. Press **- (-99+)** on the keypad. This will open the Advanced Menu.
16. Open - **Advanced Menu → Hardware Menu**.
17. Edit - **Perm Flow** - (Enter the flow value you recorded as "perm oven flow") - Accept.
18. Edit - **Perm Rate** - (Refer to the certificate that accompanies your permeation tube for the permeation rate in ng/min) - Accept.
19. Ensure the **Perm Tube Oven** is set to 50 °C.
20. Press - (the green instrument status light), this will take you to the home screen.
21. Open - **Main Menu → Calibration Menu**.
22. Perm Conc will now display the concentration being drawn through the measurement system when a span point is running.

8.10.3 IZS Transporting/Storage

Transporting the instrument should be done with great care. It is recommended that the original packaging material the Serinus was delivered in should be used when transporting or storing.

When transporting or storing the instrument the following points should be followed:

1. Slide back or remove the lid to access the inside of the instrument.
2. Unscrew the white Teflon plug on top of the permeation oven and then pull the split ring to fully remove the plug (refer to Figure 161).

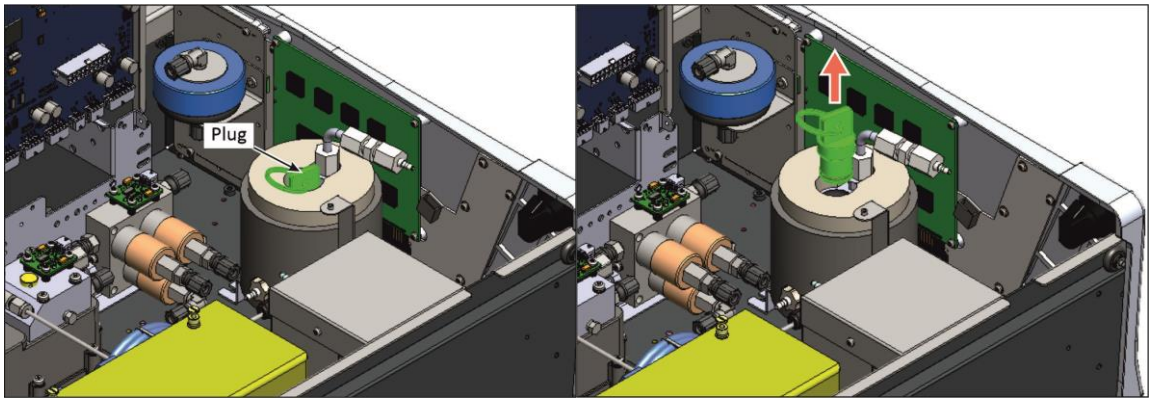

Figure 161 – Permeation Tube Removal

3. Remove the permeation tube from the permeation oven and store in its original shipping tube. If the device will not be used for at least a week and its total useful life in less than a year, the device should be placed in cold storage to prolong its useful lifespan.

4. Replace the Teflon plug back in to the permeation oven.
5. Allow the instrument some time to purge the pneumatic system.
6. Turn OFF the instrument and allow it to cool down.
7. Remove all pneumatic, power and communication connections.
8. Remove the instrument from the rack.
9. If storing over a long period (six months) turn the battery OFF by switching the DIP switch (S1) on the main controller PCA (refer to Figure 33).
10. Replace the red plugs into the pneumatic connections.
11. Remove the USB memory stick and pack with instrument (refer to Figure 32).
12. If you have the IZS option installed refer to Section 8.10.3 for specific transporting and storage instructions.
13. Place the instrument back into a plastic bag with desiccant packs and seal the bag (ideally the bag supplied upon delivery).
14. Place the instrument back into the original foam and box it was delivered in. If this is no longer available find some equivalent packaging that provides protection from damage.
15. The instrument is now ready for long term storage or transportation.

8.10.4 IZS Calibration

8.10.4.1 IZS Pressure calibration

To perform a pressure calibration refer to Section 5.2

8.10.4.2 IZS Zero

Equipment Required

- None

Procedure

1. Ensure the zero air scrubber is connected to the **BGnd Air Port**.
2. Open - **Main Menu → Calibration Menu**.
3. Select - **Cal. Type → Manual** - Accept.
4. Select - **Zero Source → Internal** - Accept.
5. Select - **Cal. Mode → Zero** - Accept.
6. Allow the instrument time to achieve a stable response.
7. Enter - **Zero Calibrate (NO)** or **(NO2)** - OK.
8. Select - **Cal. Mode → Measure** - Accept (To return to sample measure).

8.10.4.3 IZS Span

Equipment Required

- None

Procedure

1. Ensure the zero air scrubber is connected to the BGnd Air Port.
2. Open - **Main Menu → Calibration Menu**.
3. Select - **Cal. Type → Manual** - Accept.
4. Select - **Span Source → Internal** - Accept.
5. Select - **Cal. Mode → Span** - Accept.
6. Let the instrument stabilise, typically 15 minutes.
7. Enter - **Span Calibrate NOx** - (Enter the span output concentration) - Accept.
8. Select - **Cal. Mode → Measure** - Accept (To return to sample measure).

8.10.5 IZS Service and Maintenance

This maintenance kit is required when performing annual maintenance on the instrument. Depending on the environment that the instrument is operating, this maintenance may need to be carried out more often than yearly.

Table 22 – IZS Annual Maintenance Kit – (PN: E020212)

Part Description	Quantity	Part Number
Viton O-ring (3/4" ID X 1/16" W)	1	25000447-018
5g Desiccant Pack	2	C050014
Stainless Steel Sintered Filter	1	F010004
DFU Filter, 23 Micron	2	F010005
M3 x 6 Nylon Washer Shoulder	2	F050040
Neoprene Washer (0.174" x 0.38" x 0.016")	2	F050041
Compression Spring	1	H010040
Stainless Steel Sintered Filter With O-ring Groove Body	2	H010047-01
Stainless Steel Sintered Filter With Screw In Body	3	H010053
Check Valve, 1/8" Barb	1	H030140
O-ring (0.364" ID X 0.070" W)	7	O010010
O-ring (0.426" ID X 0.070" W)	1	O010011
O-ring (5/32" ID X 1/16" W)	6	O010013
O-ring (1 11/16" ID X 3/32" W)	2	O010014
O-ring (1/4" ID X 1/16" W)	7	O010015
O-ring (13/16" ID X 1/16" W)	8	O010016
O-ring (1 5/8" ID X 1/16" W)	1	O010017
O-ring (5 3/4" ID X 3/32" W)	1	O010018

Part Description	Quantity	Part Number
O-ring (0.208" ID X 0.07" W)	1	O010021
O-ring (1.739" ID X 0.07" W)	1	O010022
O-ring (BS015)	7	O010023
O-ring (0.114" ID X 0.07" W)	1	O010032
O-ring (1.989ID x 0.07W)	2	O010054
1/4" X 1/8” Tubing	3	T010026

8.10.5.1 IZS Leak Check

Equipment Required

- Source of Vacuum (pump)
- Leak Test Jig (PN: H050069)
- Kynar ¼” Blocker Nuts
- Tubing and Assorted Fittings
- 5/8” Spanner
- 9/16” Spanner

Procedure

Note: Ensure that the instrument has been running for at least one hour before this procedure is performed.

1. Turn OFF the vacuum source and allow the instrument to return to ambient pressure.
2. Disconnect all external tubing connected to the rear ports of the instrument.
3. Connect a leak check jig to the **Exhaust Port** of the instrument.
4. Connect a vacuum source to the shut off valve end of the leak test jig ensuring the shut off valve is in the open position.
5. Open - **Main Menu → Service Menu**.
6. Select - **Ozone Gen. Control → Off**.
7. Allow the instrument two minutes to purge the O3 from the pneumatic system.
8. Open - **Main Menu → Service Menu → Diagnostics Menu → Valve Menu**.
9. Disable - **Valve Sequencing → Disabled**.
10. Open - **Sample/Cal → On**.
11. Close - **Internal Zero/Cal → Off**.
12. Open - **Internal Span A → On**.
13. Open - **Internal Span B → On**.
14. Open – **NO Select → On**.

15. Close – **NOx Select → Off**.
16. Open – **Measure/Background → On**.
17. Block the **BGnd Air Port** or the inlet to the zero air scrubber.
18. Allow the instrument time to evacuate the pneumatic system (the time required will depend on the vacuum source used).
19. Close the shut off valve and record the vacuum indicated on the leak test jig. Wait for three minutes and observe the gauge on the leak check jig. It should not drop more than 5 kpa (37.5 torr). If the leak check passed skip to step 22.
20. Inspect the instrument's plumbing looking for obvious damage. Check the condition of fittings, particulate filter housing plus the O rings both in the filter assembly and in the cell assembly.
21. If the leak is still present divide up the pneumatic system into discrete sections to locate the leak (refer to Section 9.5). When the location of the leak has been determined repair and then rerun the leak check procedure.
22. Open - **Main Menu → Service Menu → Diagnostics Menu → Valve Menu**.
23. Turn **Off** the **Sample/Cal** and **Internal Span A** valve (this is done to release the vacuum safely)
24. Allow one minute for the system to equalise even when your gauge is back at ambient (residual vacuum will still be in sections of the pneumatic system). Remove the blocker on the **BGnd Air Port** or the inlet to the inlet to the zero air scrubber and inspect the internal tubing to ensuring that the tubing is cleanly connected to the fittings and that the internal Teflon lining has not been kinked or crumpled.
25. Remove the leak check jig.
26. Enable - **Valve Sequencing → Enabled**.
27. Open - **Main Menu → Service Menu**.
28. Select - **Ozone Gen. Control → Auto**.

8.11 Trace Level Instrument (PN: E020119)

The Trace installed option enables the instrument to detect levels of NO_X from 0 - 2000 ppb with a lower detectable limit of 50 ppt. The improved sensitivity, noise and zero drift specifications are made through a number of modifications to plumbing, parts and firmware.

An increased flow rate, coupled with higher operating vacuum within a highly polished reaction cell, greatly improves the signal to noise ratio allowing for more sensitive measurements to be made.

8.11.1 Trace Specifications

The following tables list the changes to a standard instrument with the trace option installed.

Table 23 – Trace Parts Removed

Part Description	Quantity	Part Numbers
Auxiliary Valve Manifold	1	H011300

Table 24 – Trace Parts Added

Part Description	Quantity	Part Number
Trace Auxiliary Valve Manifold	1	H011300-02
1/4" PTEF Straight Ferrule	2	F030028
Nut 1/4T Steel Gripper Fitting	2	F030029

8.11.1.1 Measurement

Range

0 - 2000 ppb autoranging

Lower detectable limit: 50 ppt, with Kalman filter active

8.11.1.2 Precision/Accuracy

Precision

100 ppt otherwise 0.5% of reading, whichever is greater

Sample Flow Rate

0.52 slpm (0.82 slpm total flow for the NO and NO_X flow path including 0.30 slpm bypass flow)

8.11.1.3 Calibration

Zero Drift

24 hours: < 100 ppt

8.11.2 Trace Setup

Sighting and System Setup

The sensitivity of the Serinus 40 trace requires special materials to be used for all measurement path lines. These materials must be inert to the pollutant being measured as shown below:

- Sample Column: The Sample Column should be made of glass to prevent reactions with air drawn into column.
- Sample Hood: The Sample Hood should be made of Teflon, ensuring that there is no sample retention.
- Lines: All sample transport tubing, including zero and calibration lines, must be made of virgin Teflon, PTFE or FEP.
- Regulator: A High purity, stainless steel dual stage regulator should be used.
- Stainless steel chromatography grade 1/8 gas lines should be used to connect span gas cylinder to gas dilution device.
- Calibration should be carried out by flooding the sample manifold with 10 - 20 l/m of calibration gas. This method ensures that all sample gas contact areas are exposed to the calibration gas.

- Zero air being supplied to the trace instrument must not contain more than 5 - 10% relative humidity (RH). Air that exceeds this will produce negative NO and NO_X readings of a few ppb.
- Zero calibrations should also involve flooding with zero gas at 10 - 20 l/m
- Sample gas residence time in the manifold should be less than 3.5 seconds.

Instrument

- Connect ¼ inch virgin PTFE FEP tubing to each end of a Purafil/Charcoal scrubber. Connect from BGnd Air Port to the Purafil end of scrubber, and then connect the charcoal end to the sample manifold. This will eliminate shelter (Volatile Organic Carbon) in the air supply to the Ozone generator.
- Connect a high vacuum pump with as short as possible tubing to the exhaust port. Ensure there are no leaks in these connections.

Note: During normal operating mode the cell pressure should be between 60 - 100 torr at sea level.

8.11.3 Trace Operation

Refer to Section 9.8 for a detailed pneumatic diagram.

Pneumatics

A standard Serinus 40 instrument uses calibration valves to supply sample, span and zero air to the inlet. The small error created from delivering gas through different lines is not measurable in standard instruments but can offset results in a trace level instrument. To eliminate this difference the zero and span gas is flooded directly into the sample manifold (the manifold pump or fan is disabled and isolated with a valve) to a point where it fills the entire manifold and overflows preventing any ambient external air from entering. Thus the manifold inlet now becomes the calibration vent. The air within the manifold is then drawn through the instrument where measurements can be taken and compared to the concentration being delivered by the calibration system.

Pump

The external pump recommended for use with the Serinus 40 Trace has a higher operating vacuum than the standard pump. The dual head pump is used to create a lower reaction cell pressure, this in turn increases the signal to noise ratio. Connect the external pump to the exhaust port, the exhaust port is where the reacted sample, calibration gases, background air and bypass flows are exhausted from the instrument. The exhaust port should be connected to the vacuum pump using ¼" OD tubing. The part number PUM-1001 is a 240 V high vacuum pump (PUM-1001-110 V is a 110 V high vacuum pump) available from Ecotech. This should be used to provide the required vacuum and flow for one Serinus 40 Trace analyser.

8.11.4 Trace Default Values

The Serinus 40 Trace default parameters vary from the Serinus 40 standard setup. The following is a list of the differing parameters and their new default/expected values.

Table 25 – Trace Parameter Value Changes

Parameter	Default Value
Input Pot	206
High Voltage	700
Orifice Size	1.08
Cell Pressure	60 - 100 torr

8.11.5 Trace Calibration Guidelines

To perform a multipoint calibration follow the procedure outlined in Section 5.6, some aspects of calibration need more attention to detail. These following steps detail some of the changes in the calibration procedure that must be understood before performing any calibration:

- Span/Zero gas should be injected directly into the sample column with a quantity that will flood the column preventing any external air from entering and contaminating the Span/Zero gas.
- Losses may occur in Column and pipes due to contaminants entering via sample air. Flooding the sample column and lines with zero air can help clean these contaminants out.
- The instrument must be powered up and in normal measurement calibration mode (i.e. all gas lines are attached and ready for use) for up to 48 hours before a calibration can be performed.

Note: A 48 hour preconditioning is necessary to warm-up materials and ensures that the instrument is working at its optimum when the calibration is performed. This preconditioning is particularly important for trace instrument calibrations due to the sensitive nature of the measurements.

- The Serinus 40 Trace must be used in a laboratory environment which includes air conditioning to stabilise the temperature.
- A zero test should be performed over a 24 hour period to get an accurate reading of the Lowest Detectable Limit (LDL) of the entire system installation. Throughout this time period ten minute intervals should be used to collect readings of the NO_2 from the zero air. From the data acquired the smallest detectable signal that can be accurately measured is found as well as the noise which determines the stability and precision of readings.
- A 6 Point multipoint precision check must be performed. Five points (100, 80, 60, 40 and 20%) throughout the sampling range and one point at zero.

Note: An extra point of reference in the multipoint precision check is necessary in trace instruments due to the sensitive nature of the measurements.

- A shut off valve should be designed into the sample manifold system, whereby the fan or pump used to draw in the sample air is turned OFF and the valve isolates the fan or pump from the sample manifold, when a calibration is in process (as ambient air is not required for calibration and will make calibration void). This valve can be controlled manually or via the data logger providing the data logger is designed with this function.

8.11.6 Trace Service and Maintenance

The maintenance intervals are determined by compliance standards that differ in various regions. The following is recommended by Ecotech as a guide. Compliance with local regulatory or international standards is the responsibility of the user. The below list only includes items that are different to a standard range instrument.

Table 26 – Maintenance Schedule

Interval *	Task Performed	Section
Monthly	Replace particulate filter	6.4.1
	Check sample inlet system for moisture or foreign materials and clean	
	External vacuum pump check (vacuum source) Cell Pressure of 60 - 100 torr is a good vacuum	

* Suggested intervals for maintenance procedure are a guide only and may vary with sampling intensity and/or environmental conditions. Refer to your local regulatory standard for your personalised maintenance schedule.

9. Parts List and Schematics

9.1 Serinus Accessories Kit

This kit contains assorted fittings, tubing and an orifice removal tool which are useful when working on the instruments internal pneumatics. This is usually purchased with the instrument.

Table 27 – Serinus Accessories Kit – (PN: H010136)

Part Description	Part Numbers	Quantity
Fitting Nut 1/4T KYNAR Plug	036-130440-2	4
Fitting, Kynar, Union Tee 1/8 Barb - 400 Series	F030007-01	4
Fitting, Kynar, Union 1/8 Barb	F030008	2
Kynar 1/4T Fitting Nut	F030024	4
Adaptor, 1/4" Fitting To 1/8" Barb	H010007	4
Adaptor,1/4" Tube To 1/8" Barb	H010008	2
Tool, Extraction Orifice and Filter	H010046	1
Cap, Black Rubber, 1/8	H030003	4
Cap, Black Rubber, 1/4	H030004	4
Tubing, 1/4" OD, 1/8" ID Black Norprene	T010021	3.3 ft
Ecotech Tubing 1/4 X 1/8, Flexible Silicone W/ Kynar Lining	T010026	3 ft

9.2 Maintenance Kit

This maintenance kit is required when performing annual maintenance on the instrument. Depending on the environment that the instrument is operating, this maintenance may need to be carried out more often than yearly.

Table 28 – Annual Maintenance Kit – (PN: E020203-01)

Part Description	Quantity	Part Number
5g Desiccant Pack	2	C050014
Sintered Filter	1	F010004
DFU Filter, 23 Micron	1	F010005
M3 x 6 Nylon Washer Shoulder	2	F050040
Neoprene Washer (0.174" x 0.38" x 0.016")	2	F050041
Compression Spring	1	H010040
Stainless Steel Sintered Filter With O-ring Groove Body	2	H010047-01
Stainless Steel Sintered Filter With Screw in Body	3	H010053

Part Description	Quantity	Part Number
Check Valve, 1/8" Barb	1	H030140
O-ring (0.364" ID X 0.070" W)	5	O010010
O-ring, 5/32 ID X 1/16 W	7	O010013
O-ring (1 11/16" ID X 3/32" W)	2	O010014
O-ring, 1/4 ID X 1/16 W	5	O010015
O-ring (13/16" ID X 1/16" W)	8	O010016
O-ring (1 5/8" X 1/16" W)	1	O010017
O-ring (5 3/4" ID X 3/32" W)	1	O010018
O-ring (3/16ID X 3/32" W)	2	O010019
O-ring (5/8" ID X 3/32" W)	2	O010020
O-ring (0.208" ID X 0.07" W)	1	O010021
O-ring (1.739" ID X 0.07" W)	1	O010022
O-ring (BS015)	7	O010023
O-ring, 0.114ID X 0.07W	1	O010032
O-ring, 1.989 ID x 0.07 W	2	O010054
1/4" X 1/8” Tubing	3	T010026

9.3 Consumables

Parts shown as consumables below will require replacement over the course of the instrument’s lifespan. This does not include parts that have already included in annual maintenance kits (last two items in Table 29).

Table 29 – Consumables

Part Description	Part Number
47 mm, 5 micron, Teflon Filter Paper, Pack of 50	F010006-01
NO_2 to NO Converter Assembly	H011105-40
#4 Orifice – Used In The Auxiliary Valve Manifold	H010043-02
#8 Orifice – Used In The Auxiliary Valve Manifold (2 required)	H010043-06
#3 Orifice – Used In The Permapure Dryer Assembly	H010043-01
Tube Spring Assembly, Ozone Generator	H011120-01
External Pump Repair Kit (To Suite a 607 Pump)	P031001
Internal Pump Repair Kit (to suit KNF Pump) (Bypass)	P031005
Internal Pump Repair Kit (to suit KNF Pump) (Sample)	P031013
Tubing, 1/4 x 1/8, 25 ft Length	T010026-01
Annual Maintenance Kit	E020203-01

Part Description	Part Number
IZS Annual Maintenance Kit	E020212

***Warranty Disclaimer:** The product is subject to a warranty on parts and labour from date of shipment (the warranty period). The warranty period commences when the product is shipped from the factory. **Lamps, fuses, batteries and consumable items are not covered by this warranty.**

Subject to use refers to variable ambient conditions, toxic gases, dirt, extremes of temperature and moisture ingress may shorten the lifespan of components.

9.4 Instrument Parts List

List of components and part numbers for reference.

Note: Before refer to the spare part number confirm the part number and its location in attached drawings.

Table 30 – Spare Parts List (Main Components)

Part Description	Part Number
Main Controller PCA	E020230-01
Fan (Chassis and Optical)	C020058
Calibration Valve Manifold	H010013-01
Rear Panel PCA	C010002-10
Rear Panel PCA (Network Port)	C010002
Chassis Fan filter Kit	H010044
Front Panel Assembly	H010130
Sample Filter Holder	H010160
Power Supply	P010013
NO_x Converter Assembly	H011105
Dryer Assembly	H011106
DFU Filter, 23 Micron	F010005
#3 Orifice (Dryer Assembly)	H010043-01
Ozone Generator Assembly	H011107
Ozone Generator PCA	CIR-2405
RFI Filter	F010007
Bosch Coil (Ozone Generator)	H011113-02
Conductor Shaft (Ozone Generator)	H011117-01
Spring Tube Assembly (Ozone Generator)	H011120-01
Mylar Insulator Lid (Ozone Generator)	H011122

Part Description	Part Number
Inductor Conn Assembly (Ozone Generator)	H011123
EMI Shielding Foam	H030106
PMT Assembly	H011200
Pressure Sensor PCA (Reaction Cell and Auxiliary Valve Manifold)	C010004
Heater Thermistor Assembly (Reaction Cell and Auxiliary Valve Manifold)	C020073
Cooler and Thermistor Assembly (PMT Assembly)	C020088
Sintered Filter (Reaction Cell)	F010004
Gasket for Pressure Sensor PCA	H010037
Sintered Filter, Threaded Body (Reaction Cell and Auxiliary Valve Manifold)	H010053
Reaction Cell	H011101
PMT Tube	H011203
PMT Magnetic Shield	H011204
NO_x Optical Bandpass Filter	H011205
Optical Filter Cover	H011206
Heatsink	H011209
Cold Block	H011210
PMT Assembly Housing	H011212
Auxiliary Valve Manifold Assembly	H011300
Compression Spring (Auxiliary Valve Manifold)	H010040
#4 Orifice (Auxiliary Valve Manifold)	H010043-02
#8 Orifice (Auxiliary Valve Manifold)	H010043-06
Sintered Filter (Auxiliary Valve Manifold)	H010047-01
Auxiliary Valve Manifold Block	H011301
1/8" Check Valve	H030140
Main Controller PCA	E020230-01
Fan (Chassis and Optical)	C020058
Calibration Valve Manifold	H010013-01
Rear Panel PCA	C010002-10
Chassis Fan filter Kit	H010044

Table 31 – Spare Parts List (Cables)

Part Description	Part Number
O3 Generator Cable	C020057
Pressure Sensor Cable (Auxiliary Valve Manifold)	C020062-01
Pressure Sensor Cable (Reaction Cell)	C020062-02
Display Cable	C020065
Analog & Digital I/O Cable	C020066
Heater and Thermistor Cable (NO_x Converter)	C020071
Bluetooth Cable	C020119
PMT Power supply Cable	C020050-01

Table 32 – Spare Parts List (O-rings)

Part Description	Part Number
O-ring, 1/4 ID X 1/16 W (Calibration and Auxiliary Valve Manifold)	O010015
O-ring, 1.989 ID x 0.07 W (Sample Filter)	O010054
O-ring, 5/32 ID X 1/16 W (Used in Dryer and Auxiliary Valve Manifold Orifice)	O010013
O-ring 3/6 ID X 3/32 W (Ozone Generator Conductor Shaft)	O010035
O-ring 1 1/4 ID X 1/16 W (PMT Assembly)	25000419-4
O-ring 1.739 ID X 0.07 W (PMT Cable Desiccant Cap)	O010022
O-ring 13/16 ID X 1/16 W (Bandpass Filter)	O010016
O-ring 1-5/8 ID X 1/16 W (Optical Filter Cover)	O010017
O-ring 5-3/4 ID X 3/32 W (PMT Assembly Housing)	O010018
O-ring 0.208 ID X 0.07 W (Test Lamp Plug)	O010021
O-ring 0.114 ID X 0.07 W (Auxiliary Valve Manifold)	O010032

Table 33 – Spare Parts List (Fittings)

Part Description	Part Number
1/4T Compression Fitting Nut	F030202-01
1/4T Suit Compression Ferrule	F030203-01
1/4T Union Tee Fitting	F030210-01
Male Connector Fitting	F030200-01
Hose Spring Clamp	H010063
Kynar Bulkhead Union Fitting	F030023
1/4" to 1/8" Adaptor Fitting	H010007

Part Description	Part Number
Male Elbow Fitting	F030201-01
Kynar Male Elbow Fitting 1/8T - 1/8 NPT	28001146-1
Hex Head Screw M6 X 16	F050114
Tube Ferrule	H011132
M25 Nut	H011133
Grommet 1/4" ID x 3/8" OD	H030079
Silicon Rubber Square Tape	H050055
Fitting Plug 1/16 NPT	F030015
Kynar Male Connector Fitting 1/4T, 1/8 NPT	F030020
Male Elbow Fitting	F030025
Shoulder Washer M3 X 6	F050040
Washer 0.178 X 0.38 X 0.016	F050041
Kynar Male Elbow Fitting	F030032-02
Spacer 6.35 mm OD X 6 MM L (Auxiliary Valve Manifold)	HAR-8712

Table 34 – Spare Parts List (Miscellaneous)

Part Description	Part Number
Fan Bracket (PMT Assembly)	H010005
PCB Support Bracket	H010011-01
9/16” High Foot Bumper	H010039
Black Blanking Plug	H010041
Front Panel Clearance Spacer	H010064
Rectangular Blanking Plug	H010067
Main Controller PCA Support Bracket (Rear Panel Side)	H010111
Sample Filter mounting Plate	H010126
Roller Bearing	H010131
Power Supply Bracket	H010138
Rear Panel	H010142
Push Button Slam Lock	H030114
Nylon P Clip, 1/2" (12.7 mm)	H030149
Main Controller PCA Support Bracket (Front Panel Side)	H010117
Serinus 40 NO_x Label	H010132-09
Ozone Generator and Dryer Bracket	H011102
Cable Tie Mount 203 mm	H030082

Part Description	Part Number
Ozone Generator Housing Lid	H011102-01
Ozone Generator Bracket	H011112
Retainer Tube Block (Ozone Generator)	H011116-01
Cable Tie Mount	H030076
Lashing Releasable Cable Tie (Ozone Generator)	H030080
Teflon Tubing 1/8	TUB-1000
Exhaust Tube (NO_x Converter to Reaction Cell)	H011110
Heatsink Bracket	H010006
Plug	H010026
Heatsink Spacer	H011208
Optical Bench Housing Plug	H011213
8 GB USB Memory Stick	H030021
Cable Clip Mount 13.5 X 14 mm (L X H)	H030121
Cable Clip Mount 10 X 17.5 mm (L X H)	H030122
USB Cable	COM-1440
Thumb Screw (Rear Panel)	F050037
Thumb Screw (Main Controller PCA)	F050120
Green Ecotech Resources USB Stick	H030137-01

Table 35 – Spare Parts List (Shipping)

Part Description	Part Number
Shipping Box	B010002
End Caps (Pair)	B010026
Plastic Bag 760 X 1000 50 X UM	B020001
Desiccant Pack (5 gm)	C050014
Mid Support Cap	B010034
Desiccant Pack (25 gm)	C050012

9.4.1 Optional Extras Spare Part List

Table 36 – Spare Part List (Test Lamp)

Part Description	Quantity	Part Number
NO_x Test Lamp	1	C020068-01
Quartz Window	1	H010002

Table 37 – Spare Part List (Sample Dryer)

Part Description	Quantity	Part Number
Sample Dryer Assembly	1	H011150

Table 38 – Spare Part List (Internal Pump)

Part Description	Quantity	Part Number
Internal Pump	1	H011140
Internal Pump, Low Vacuum (Bypass)	1	H010027
Flow Block Assembly	1	H013165
Flow Block Thermal Isolator	1	H010119
Stop Valve	2	H030170
Micro Wire Saddle	3	H030121
Pressure Sensor Cable	1	C020062-02
Heater and Thermistor Cable	1	C020083
Bypass Pump Cable Harness	1	C020158

Table 39 – Spare Part List (Metric Fittings Kit)

Part Description	Part Number
Metric Fitting Kit	E020122
Nut 1/4T Steel Gripper Fitting	F030029
Reducing Ferrule, 1/4 - 6mm	F030071
Swagelok Fitting, Nut & Ferrule Set, 6 mm (Only for High Pressure Zero/Span Option)	F030077

Table 40 – Spare Part List (High Pressure Zero/Span Valves)

Part Description	Part Number
Bulkhead Fitting 1/4 T, SS	98300076
O-ring, BS015	O010023
Swagelok fitting pipe adaptor 1/4 T - 1/8 NPT, SS	28590462-3
#12 Orifice	H010043-11
O-ring,5/32 ID X 1/16 W	O010013
M12 Star Washer	F050131
M12 Flat Washer	F050130
High Pressure Valve Assembly (Exclude the Orifice and O-Ring)	H050043

Table 41 – Spare Part List (High Level Instrument)

Part Description	Part Number
1/4" - 1/8" PTFE Ferrule Reducing	F030031
Sample Filter Holder	H010160
Dual Coil NO_x Converter Assembly	H011105-01
High Level Optical Bandpass Filter	H011205-01
High Level Auxiliary Valve Manifold Assembly	H011300-01
Insulator, Mill Board 115 X 115 mm, 2 mm Thick	H060001

Table 42 – Spare Part List (IZS)

Part Description	Part Number
IZS Heater Cable for Permeation Oven	C020092
DFU Filter, 23 Micron	F010005
Kynar Male Connector Fitting 1/4T, 1/8 NPT	F030020
1/4" PTEF Straight Ferrule	F030028
Nut 1/4T Steel Gripper Fitting	F030029
Fitting, KYNAR Union Tee	F030034-02
Compression Fitting Nut	F030202-01
1/4T Ferrule	F030203-01
1/4T Tee Union Fitting	F030210-01
1/4" to 1/8" Adaptor Fitting	H010007
#3 Orifice with O-ring Groove	H010043-01
IZS Calibration Valve Manifold Assembly	H010056
IZS Permeation Oven Assembly	H012170
O-ring, 5/32 ID X 1/16 W	O010013
Zero Air Scrubber Kit	H011160

Table 43 – Spare Part List (Trace Level Instrument)

Part Description	Part Number
Trace Auxiliary Valve Manifold	H011300-02
1/4" PTEF Straight Ferrule	F030028
Nut 1/4T Steel Gripper Fitting	F030029

9.5 Plumbing Schematic – (PN: D020002)

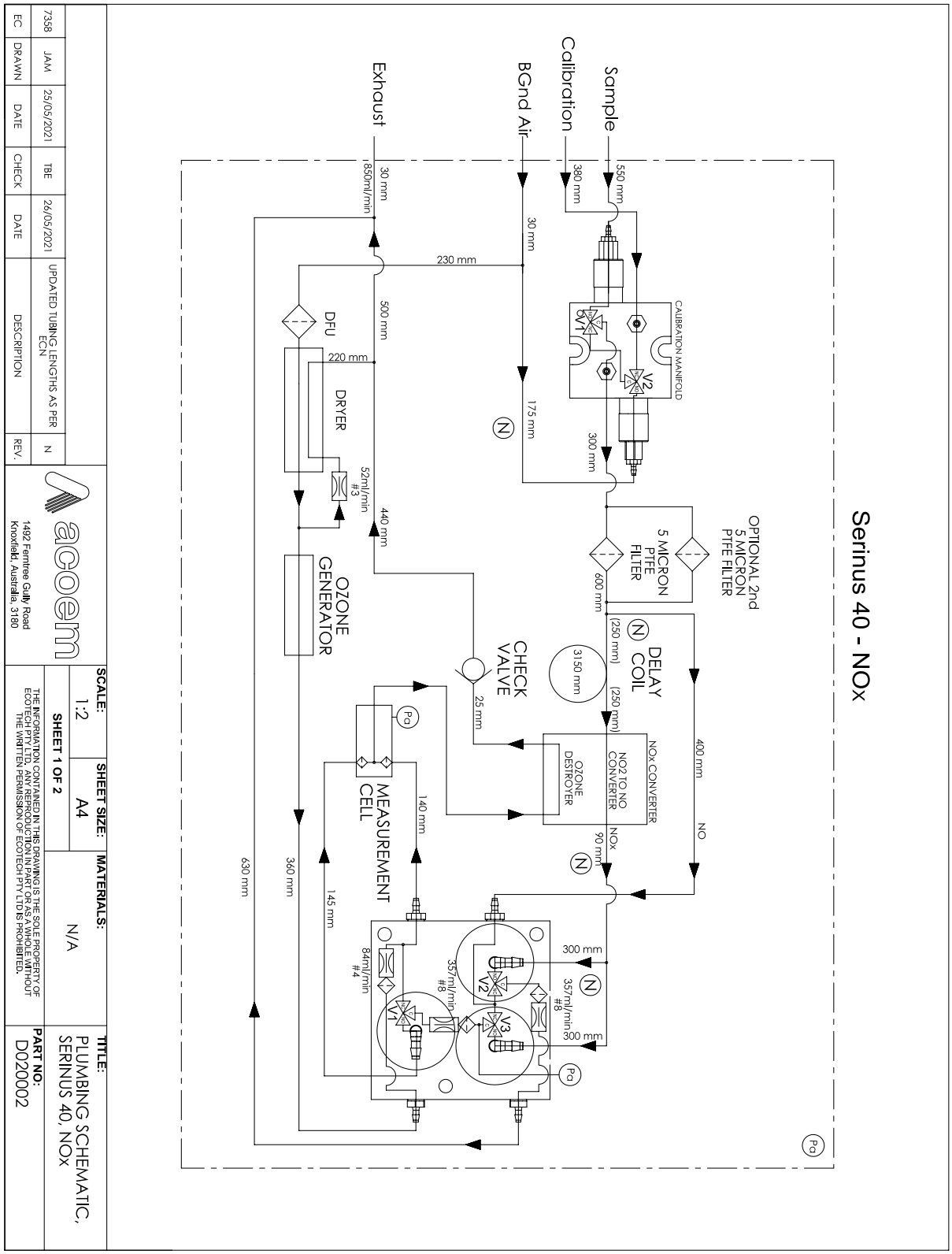

		VALVE STATES						
		CALIBRATION MANIFOLD		AUXILIARY VALVE MANIFOLD			PRESSURISED CALIBRATION VALVES	
		(V1) - (J11-6) (SAMPLE/CAL)	(V2) - (J11-7) (INTERNAL ZERO/CAL)	(V1) - (J12-6) (MEASURE/BACKGROUND)	(V2) - (J12-7) (NOx SELECT)	(V3) - (J12-8) (NO SELECT)	(J11-10) (PRESSURISED ZERO)	(J11-9) (PRESSURISED SPAN)
MODE	NO SAMPLE MEASURE	OFF	OFF	OFF	OFF	ON	OFF	OFF
	NO INTERNAL ZERO MEASURE	ON	OFF	OFF	OFF	ON	OFF	OFF
	NO EXTERNAL ZERO MEASURE	ON	ON	OFF	OFF	ON	ON	OFF
	NO EXTERNAL SPAN MEASURE	ON	ON	OFF	OFF	ON	OFF	ON
	NOx SAMPLE MEASURE	OFF	OFF	OFF	ON	OFF	OFF	OFF
	NOx INTERNAL ZERO MEASURE	ON	OFF	OFF	ON	OFF	OFF	OFF
	NOx EXTERNAL ZERO MEASURE	ON	ON	OFF	ON	OFF	ON	OFF
	NOx EXTERNAL SPAN MEASURE	ON	ON	OFF	ON	OFF	OFF	ON
	BACKGROUND SAMPLE MEASURE	OFF	OFF	ON	OFF	ON	OFF	OFF
	BACKGROUND INTERNAL ZERO MEASURE	ON	OFF	ON	OFF	ON	OFF	OFF
	BACKGROUND EXTERNAL ZERO MEASURE	ON	ON	ON	OFF	ON	ON	OFF
	BACKGROUND EXTERNAL SPAN MEASURE	ON	ON	ON	OFF	ON	OFF	ON

acoem

1492 Ferntree Gully Road
Knoxfield, Australia, 3180

SCALE: 1:2
SHEET SIZE: A4
SHEET 2 OF 2
MATERIALS: N/A

THE INFORMATION CONTAINED IN THIS DRAWING IS THE SOLE PROPERTY OF ECOTECH PTY LTD. ANY REPRODUCTION IN PART OR AS A WHOLE WITHOUT THE WRITTEN PERMISSION OF ECOTECH PTY LTD IS PROHIBITED.

TITLE: VALVE STATES, PLUMBING SCHEMATIC, SERINUS 40, NOx

PART NO: D020002

9.6 Internal Pump Plumbing Schematic – (PN: D020063)

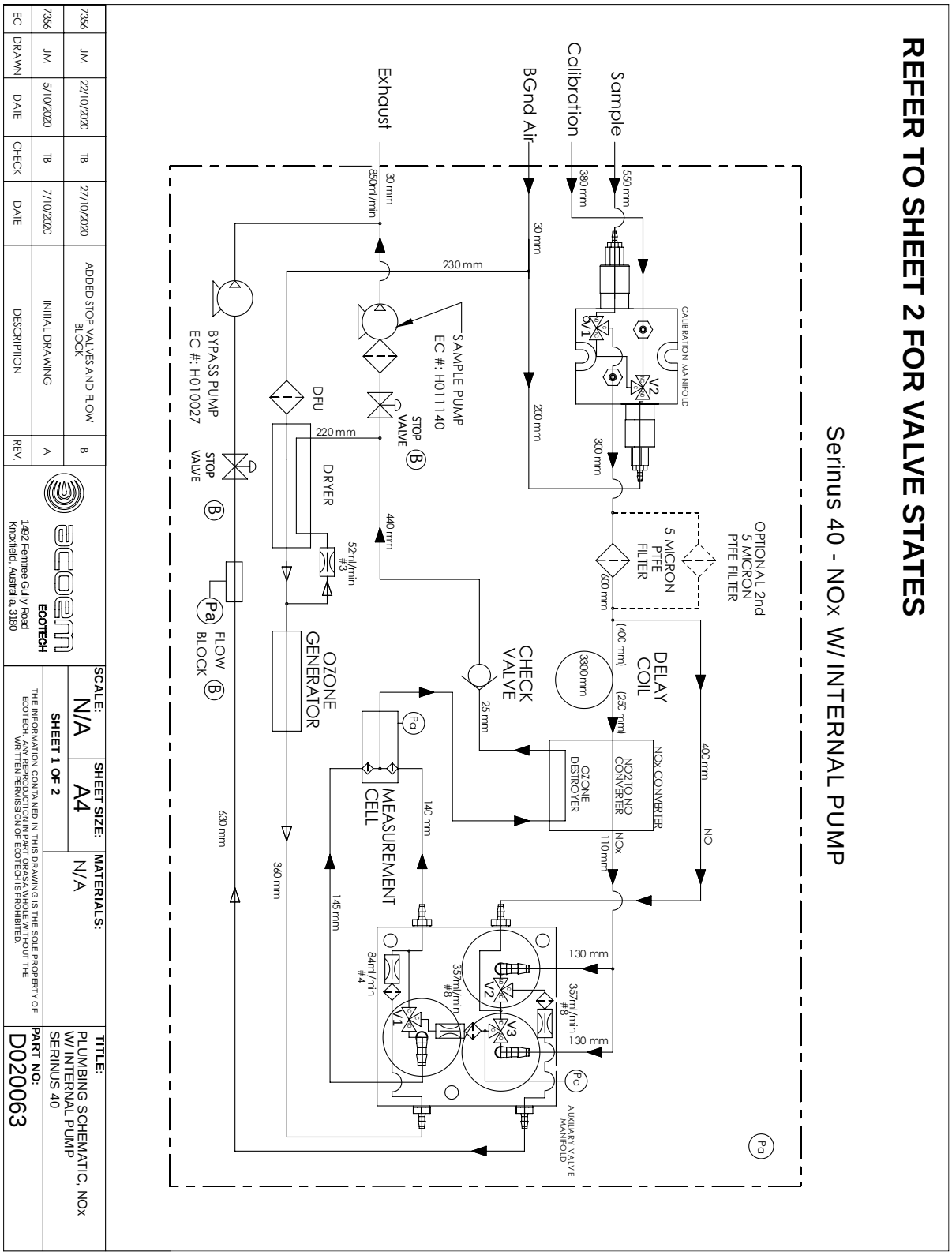

REV.	DESCRIPTION	DATE	CHECK	DATE	DRAWN	DATE
B	ADDED STOP VALVES AND FLOW BLOCK	27/10/2020	TB	22/10/2020	JM	7356
A	INITIAL DRAWING	7/10/2020	TB	5/10/2020	JM	7356

ecotech
ECOTECH
1492 Ferntree Gully Road
Knoxfield, Australia, 3180

SCALE: N/A
SHEET SIZE: A4
SHEET 1 OF 2
MATERIALS: N/A

THE INFORMATION CONTAINED IN THIS DRAWING IS THE SOLE PROPERTY OF ECOTECH. ANY REPRODUCTION IN PART OR AS A WHOLE WITHOUT THE WRITTEN PERMISSION OF ECOTECH IS PROHIBITED.

TITLE: PLUMBING SCHEMATIC, NOx W/ INTERNAL PUMP SERINUS 40
PART NO: D020063

		VALVE STATES						
		CALIBRATION MANIFOLD		AUXILIARY VALVE MANIFOLD			PRESSURISED CALIBRATION VALVES	
		(V1) - (J11-6) (SAMPLE/CAL)	(V2) - (J11-7) (INTERNAL ZERO/CAL)	(V1) - (J12-6) (MEASURE/BACKGROUND)	(V2) - (J12-7) (NOx SELECT)	(V3) - (J12-8) (NO SELECT)	(J11-10) (PRESSURISED ZERO)	(J11-9) (PRESSURISED SPAN)
MODE	NO SAMPLE MEASURE	OFF	OFF	OFF	OFF	ON	OFF	OFF
	NO INTERNAL ZERO MEASURE	ON	OFF	OFF	OFF	ON	OFF	OFF
	NO EXTERNAL ZERO MEASURE	ON	ON	OFF	OFF	ON	ON	OFF
	NO EXTERNAL SPAN MEASURE	ON	ON	OFF	OFF	ON	OFF	ON
	NOx SAMPLE MEASURE	OFF	OFF	OFF	ON	OFF	OFF	OFF
	NOx INTERNAL ZERO MEASURE	ON	OFF	OFF	ON	OFF	OFF	OFF
	NOx EXTERNAL ZERO MEASURE	ON	ON	OFF	ON	OFF	ON	OFF
	NOx EXTERNAL SPAN MEASURE	ON	ON	OFF	ON	OFF	OFF	ON
	BACKGROUND SAMPLE MEASURE	OFF	OFF	ON	OFF	ON	OFF	OFF
	BACKGROUND INTERNAL ZERO MEASURE	ON	OFF	ON	OFF	ON	OFF	OFF
	BACKGROUND EXTERNAL ZERO MEASURE	ON	ON	ON	OFF	ON	ON	OFF
	BACKGROUND EXTERNAL SPAN MEASURE	ON	ON	ON	OFF	ON	OFF	ON

acoem
ECOTECH
1492 Ferntree Gully Road
Knoxfield, Australia, 3180

SCALE:	SHEET SIZE:	MATERIALS:	TITLE:
N/A	A4	N/A	PLUMBING SCHEMATIC, SERINUS 40, NOX
SHEET 2 OF 2			PART NO: D020063

THE INFORMATION CONTAINED IN THIS DRAWING IS THE SOLE PROPERTY OF ECOTECH. ANY REPRODUCTION IN PART OR AS A WHOLE WITHOUT THE WRITTEN PERMISSION OF ECOTECH IS PROHIBITED.

9.7 High Level Plumbing Schematic – (PN: D020024)

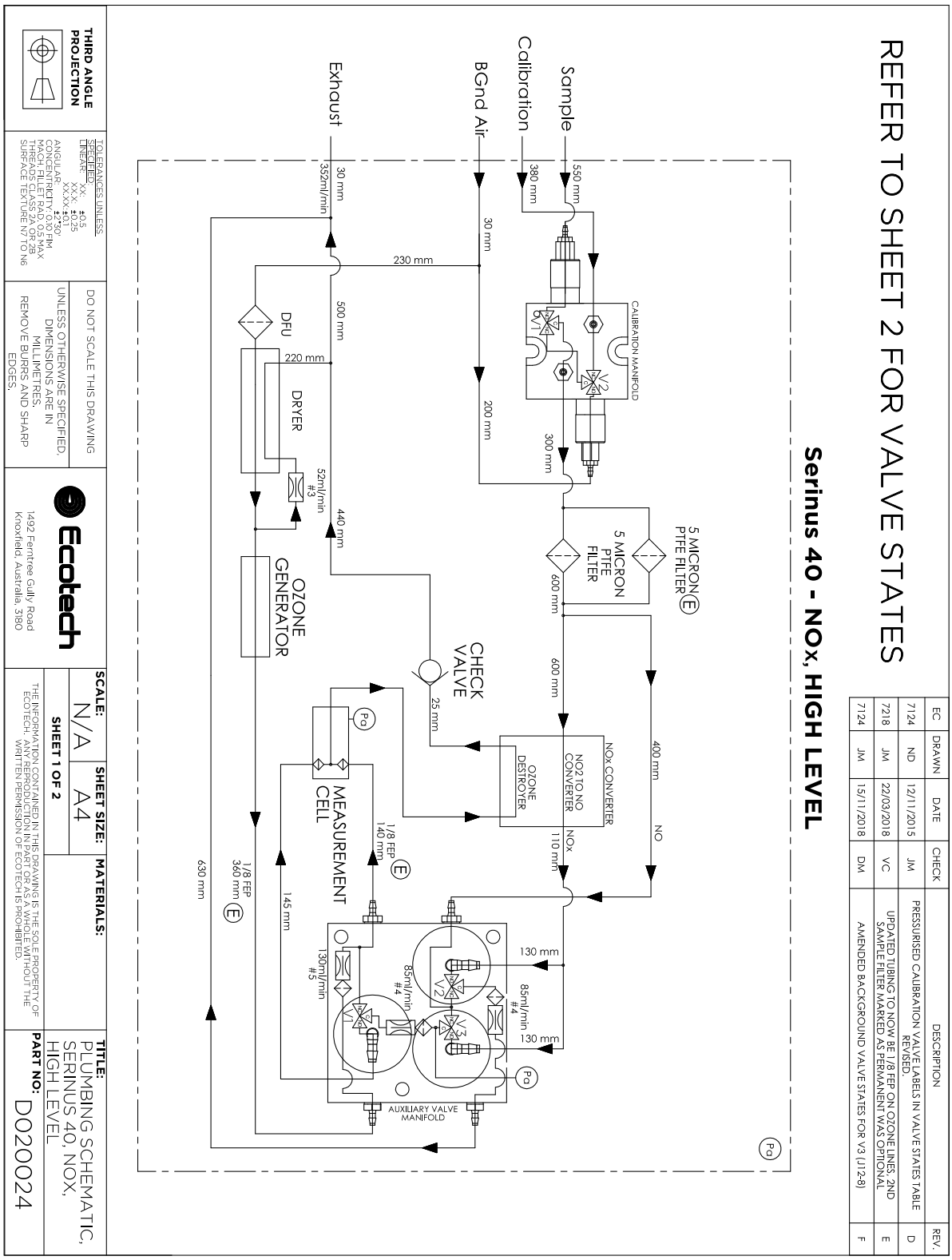

		VALVE STATES						
		CALIBRATION MANIFOLD		AUXILIARY VALVE MANIFOLD			PRESSURISED CALIBRATION VALVES	
		(V1) - (J11-6) (SAMPLE/CAL)	(V2) - (J11-7) (INTERNAL ZERO/CAL)	(V1) - (J12-6) (MEASURE/BACKGROUND)	(V2) - (J12-7) (NOx SELECT)	(V3) - (J12-8) (NO SELECT)	(J11-10) (PRESSURISED ZERO)	(J11-9) (PRESSURISED SPAN)
MODE	NO SAMPLE MEASURE	OFF	OFF	OFF	OFF	ON	OFF	OFF
	NO INTERNAL ZERO MEASURE	ON	OFF	OFF	OFF	ON	OFF	OFF
	NO EXTERNAL ZERO MEASURE	ON	ON	OFF	OFF	ON	ON	OFF
	NO EXTERNAL SPAN MEASURE	ON	ON	OFF	OFF	ON	OFF	ON
	NOx SAMPLE MEASURE	OFF	OFF	OFF	ON	OFF	OFF	OFF
	NOx INTERNAL ZERO MEASURE	ON	OFF	OFF	ON	OFF	OFF	OFF
	NOx EXTERNAL ZERO MEASURE	ON	ON	OFF	ON	OFF	ON	OFF
	NOx EXTERNAL SPAN MEASURE	ON	ON	OFF	ON	OFF	OFF	ON
	BACKGROUND SAMPLE MEASURE	OFF	OFF	ON	OFF	ON	OFF	OFF
	BACKGROUND INTERNAL ZERO MEASURE	ON	OFF	ON	OFF	ON	OFF	OFF
	BACKGROUND EXTERNAL ZERO MEASURE	ON	ON	ON	OFF	ON	ON	OFF
	BACKGROUND EXTERNAL SPAN MEASURE	ON	ON	ON	OFF	ON	OFF	ON

F

THIRD ANGLE PROJECTION

TOLERANCES UNLESS SPECIFIED:
LINEAR: XX: ±0.5
XX.X: ±0.25
XX.XX: ±0.1
ANGULAR: ±2°30'
CONCENTRICITY: 0.10 FIM
MACH. FILLET RAD. 0.5 MAX
THREADS CLASS 2A OR 2B
SURFACE TEXTURE N7 TO N6

DO NOT SCALE THIS DRAWING

UNLESS OTHERWISE SPECIFIED, DIMENSIONS ARE IN MILLIMETRES. REMOVE BURRS AND SHARP EDGES.

Ecotech
1492 Ferntree Gully Road
Knoxfield, Australia, 3180

SCALE: N/A
SHEET SIZE: A4
SHEET 2 OF 2
MATERIALS:

THE INFORMATION CONTAINED IN THIS DRAWING IS THE SOLE PROPERTY OF ECOTECH. ANY REPRODUCTION IN PART OR AS A WHOLE WITHOUT THE WRITTEN PERMISSION OF ECOTECH IS PROHIBITED.

TITLE: PLUMBING SCHEMATIC, SERINUS 40, NOX, HIGH LEVEL
PART NO: D020024

S:\ECOTECH\ENGINEERING\CAD\D02\

9.8 Trace Level Plumbing Schematic – (PN: D020065)

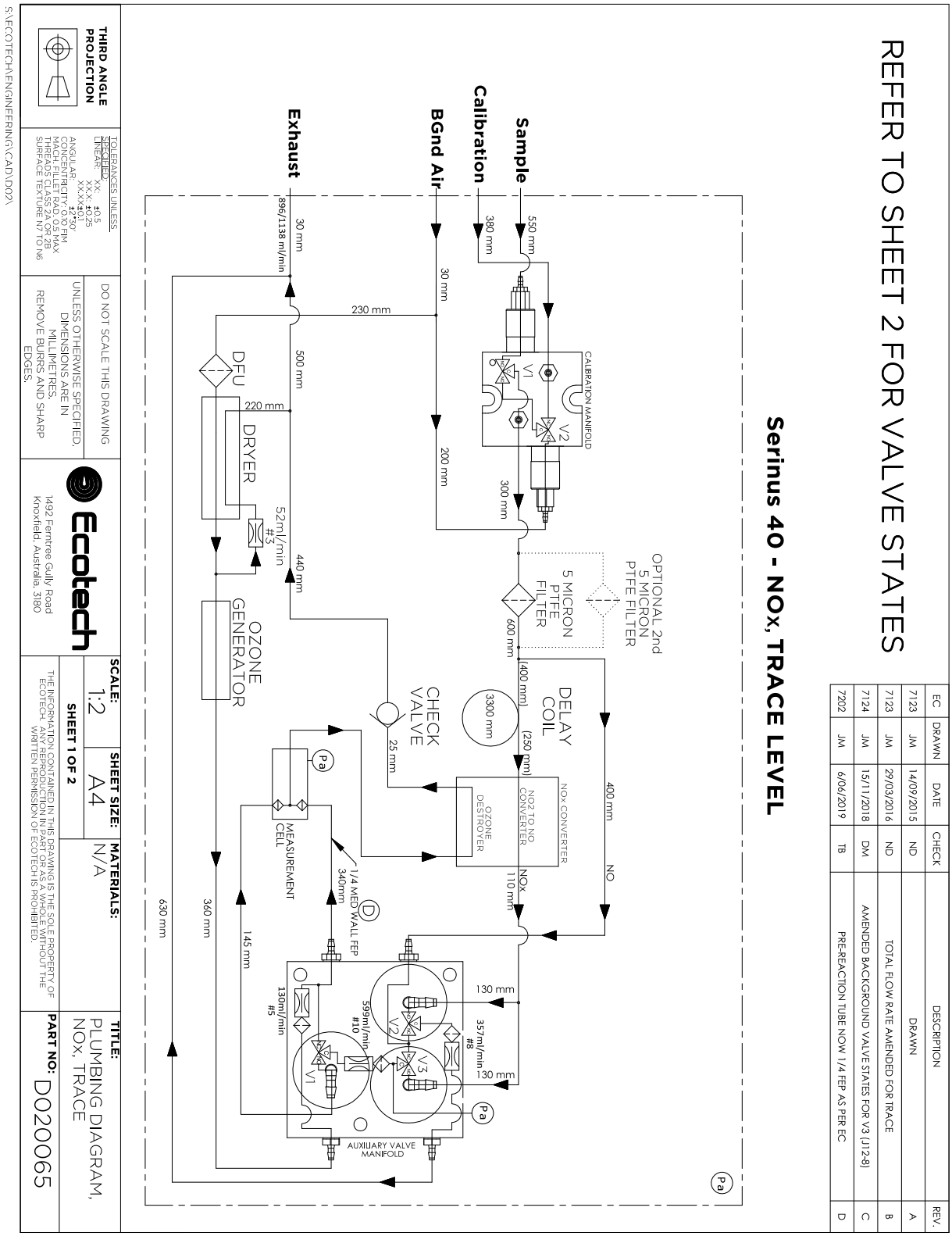

		VALVE STATES						
		CALIBRATION MANIFOLD		AUXILIARY VALVE MANIFOLD			PRESSURISED CALIBRATION VALVES	
		(V1) - (J11-6) (SAMPLE/CAL)	(V2) - (J11-7) (INTERNAL ZERO/CAL)	(V1) - (J12-6) (MEASURE/BACKGROUND)	(V2) - (J12-7) (NOx SELECT)	(V3) - (J12-8) (NO SELECT)	(J11-10) (PRESSURISED ZERO)	(J11-9) (PRESSURISED SPAN)
MODE	NO SAMPLE MEASURE	OFF	OFF	OFF	OFF	ON	OFF	OFF
	NO INTERNAL ZERO MEASURE	ON	OFF	OFF	OFF	ON	OFF	OFF
	NO EXTERNAL ZERO MEASURE	ON	ON	OFF	OFF	ON	ON	OFF
	NO EXTERNAL SPAN MEASURE	ON	ON	OFF	OFF	ON	OFF	ON
	NOx SAMPLE MEASURE	OFF	OFF	OFF	ON	OFF	OFF	OFF
	NOx INTERNAL ZERO MEASURE	ON	OFF	OFF	ON	OFF	OFF	OFF
	NOx EXTERNAL ZERO MEASURE	ON	ON	OFF	ON	OFF	ON	OFF
	NOx EXTERNAL SPAN MEASURE	ON	ON	OFF	ON	OFF	OFF	ON
	BACKGROUND SAMPLE MEASURE	OFF	OFF	ON	OFF	ON	OFF	OFF
	BACKGROUND INTERNAL ZERO MEASURE	ON	OFF	ON	OFF	ON	OFF	OFF
	BACKGROUND EXTERNAL ZERO MEASURE	ON	ON	ON	OFF	ON	ON	OFF
	BACKGROUND EXTERNAL SPAN MEASURE	ON	ON	ON	OFF	ON	OFF	ON

THIRD ANGLE PROJECTION

TOLERANCES UNLESS SPECIFIED:
LINEAR: XX: ±0.5
XX.X: ±0.25
XX.XX ±0.1
ANGULAR: ±2°30'
CONCENTRICITY: 0.10 FIM
MACH. FILLET RAD. 0.5 MAX
THREADS CLASS 2A OR 2B
SURFACE TEXTURE N7 TO N6

DO NOT SCALE THIS DRAWING

UNLESS OTHERWISE SPECIFIED, DIMENSIONS ARE IN MILLIMETRES. REMOVE BURRS AND SHARP EDGES.

Ecotech
1492 Ferntree Gully Road
Knoxfield, Australia, 3180

SCALE: 1:2
SHEET SIZE: A4
SHEET 2 OF 2
MATERIALS: N/A

THE INFORMATION CONTAINED IN THIS DRAWING IS THE SOLE PROPERTY OF ECOTECH. ANY REPRODUCTION IN PART OR AS A WHOLE WITHOUT THE WRITTEN PERMISSION OF ECOTECH IS PROHIBITED.

TITLE: VALVE STATES, PLUMBING DIAGRAM, NOx, TRACE
PART NO: D020065

S:\ECOTECH\ENGINEERING\CAD\D02\

9.9 Sample Dryer Plumbing Schematic – (PN: D020064)

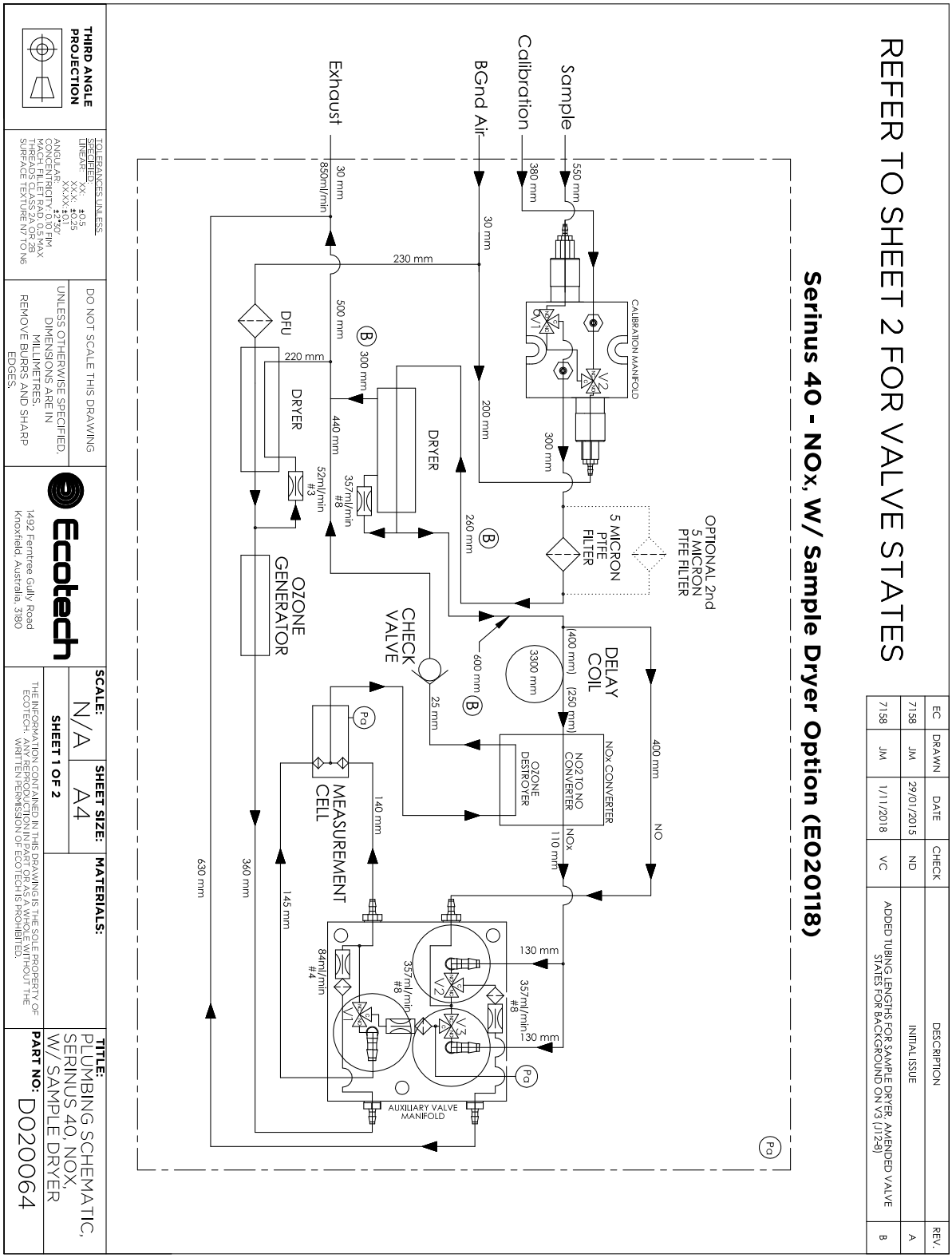

EC	DRAWN	DATE	CHECK	DESCRIPTION	REV.
7158	JM	29/01/2015	ND	INITIAL ISSUE	A
7158	JM	1/11/2018	VC	ADDED TUBING LENGTHS FOR SAMPLE DRYER. AMENDED VALVE STATES FOR BACKGROUND ON V3 (J12-8)	B

THIRD ANGLE PROJECTION

TOLERANCES UNLESS SPECIFIED:
LINEAR: XX: ±0.5, XX.X: ±0.25, XX.XX: ±0.10
ANGULAR: ±1°30'
CONCENTRICITY: 0.10 FIM
MACH. FILLET RAD. 0.5 MAX
THREADS: CLASS 2A OR 2B
SURFACE TEXTURE N7 TO N6

DO NOT SCALE THIS DRAWING
UNLESS OTHERWISE SPECIFIED, DIMENSIONS ARE IN MILLIMETRES.
REMOVE BURRS AND SHARP EDGES.

Ecotech
1492 Ferntree Gully Road
Knoxfield, Australia, 3180

SCALE: N/A
SHEET SIZE: A4
SHEET 1 OF 2
MATERIALS:

THE INFORMATION CONTAINED IN THIS DRAWING IS THE SOLE PROPERTY OF ECOTECH. ANY REPRODUCTION IN PART OR AS A WHOLE WITHOUT THE WRITTEN PERMISSION OF ECOTECH IS PROHIBITED.

TITLE: PLUMBING SCHEMATIC, SERINUS 40, NOX, W/ SAMPLE DRYER
PART NO: D020064

S:\ECOTECH\ENGINEERING\CAD\D02\

		VALVE STATES						
		CALIBRATION MANIFOLD		AUXILIARY VALVE MANIFOLD			PRESSURISED CALIBRATION VALVES	
		(V1) - (J11-6) (SAMPLE/CAL)	(V2) - (J11-7) (INTERNAL ZERO/CAL)	(V1) - (J12-6) (MEASURE/BACKGROUND)	(V2) - (J12-7) (NOx SELECT)	(V3) - (J12-8) (NO SELECT)	(J11-10) (PRESSURISED ZERO)	(J11-9) (PRESSURISED SPAN)
MODE	NO SAMPLE MEASURE	OFF	OFF	OFF	OFF	ON	OFF	OFF
	NO INTERNAL ZERO MEASURE	ON	OFF	OFF	OFF	ON	OFF	OFF
	NO EXTERNAL ZERO MEASURE	ON	ON	OFF	OFF	ON	ON	OFF
	NO EXTERNAL SPAN MEASURE	ON	ON	OFF	OFF	ON	OFF	ON
	NOx SAMPLE MEASURE	OFF	OFF	OFF	ON	OFF	OFF	OFF
	NOx INTERNAL ZERO MEASURE	ON	OFF	OFF	ON	OFF	OFF	OFF
	NOx EXTERNAL ZERO MEASURE	ON	ON	OFF	ON	OFF	ON	OFF
	NOx EXTERNAL SPAN MEASURE	ON	ON	OFF	ON	OFF	OFF	ON
	BACKGROUND SAMPLE MEASURE	OFF	OFF	ON	OFF	ON	OFF	OFF
	BACKGROUND INTERNAL ZERO MEASURE	ON	OFF	ON	OFF	ON	OFF	OFF
	BACKGROUND EXTERNAL ZERO MEASURE	ON	ON	ON	OFF	ON	ON	OFF
	BACKGROUND EXTERNAL SPAN MEASURE	ON	ON	ON	OFF	ON	OFF	ON

THIRD ANGLE PROJECTION

TOLERANCES UNLESS SPECIFIED:
LINEAR: XX: ±0.5
XX.X: ±0.25
XX.XX: ±0.1
ANGULAR: ±2°30'
CONCENTRICITY: 0.10 FIM
MACH. FILLET RAD. 0.5 MAX
THREADS CLASS 2A OR 2B
SURFACE TEXTURE N7 TO N6

DO NOT SCALE THIS DRAWING

UNLESS OTHERWISE SPECIFIED, DIMENSIONS ARE IN MILLIMETRES. REMOVE BURRS AND SHARP EDGES.

Ecotech
1492 Ferntree Gully Road
Knoxfield, Australia, 3180

SCALE: N/A
SHEET SIZE: A4
SHEET 2 OF 2
MATERIALS:

THE INFORMATION CONTAINED IN THIS DRAWING IS THE SOLE PROPERTY OF ECOTECH. ANY REPRODUCTION IN PART OR AS A WHOLE WITHOUT THE WRITTEN PERMISSION OF ECOTECH IS PROHIBITED.

TITLE: PLUMBING SCHEMATIC, SERINUS 40, NOX

PART NO: D020064

S:\ECOTECH\ENGINEERING\CAD\D02\

9.10 IZS Plumbing Schematic – (PN: D020052)

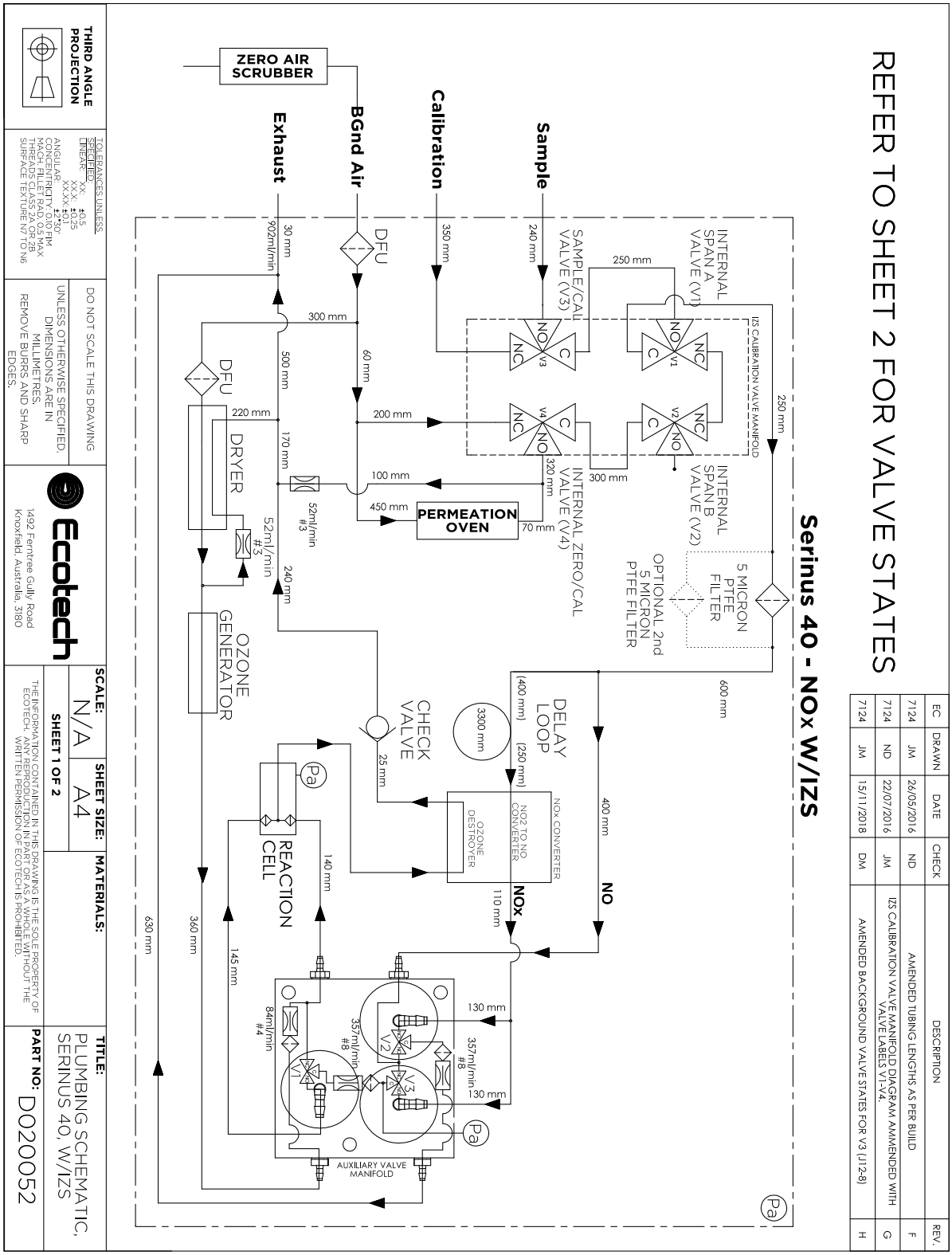

		VALVE STATES						
		IZS CALIBRATION MANIFOLD				AUXILIARY VALVE MANIFOLD		
		(V1) - (J11-8) (INTERNAL SPAN A)	(V2) - (J11-9) (INTERNAL SPAN B)	(V3) - (J11-6) (SAMPLE/CAL)	(V4) - (J11-7) (INTERNAL ZERO/CAL)	(V1) - (J12-6) (MEASURE/BACKGROUND)	(V2) - (J12-7) (NOx SELECT)	(V3) - (J12-8) (NO SELECT)
MODE	NO SAMPLE MEASURE	OFF	OFF	OFF	OFF	OFF	OFF	ON
	NO INTERNAL ZERO MEASURE	ON	ON	OFF	ON	OFF	OFF	ON
	NO EXTERNAL ZERO MEASURE	OFF	OFF	ON	ON	OFF	OFF	ON
	NO INTERNAL SPAN MEASURE	ON	ON	OFF	OFF	OFF	OFF	ON
	NO EXTERNAL SPAN MEASURE	OFF	OFF	ON	ON	OFF	OFF	ON
	NOx SAMPLE MEASURE	OFF	OFF	OFF	OFF	OFF	ON	OFF
	NOx INTERNAL ZERO MEASURE	ON	ON	OFF	ON	OFF	ON	OFF
	NOx EXTERNAL ZERO MEASURE	OFF	OFF	ON	ON	OFF	ON	OFF
	NOx INTERNAL SPAN MEASURE	ON	ON	OFF	OFF	OFF	ON	OFF
	NOx EXTERNAL SPAN MEASURE	OFF	OFF	ON	ON	OFF	ON	OFF
	BACKGROUND SAMPLE MEASURE	OFF	OFF	OFF	OFF	ON	OFF	ON
	BACKGROUND INTERNAL ZERO MEASURE	ON	ON	OFF	ON	ON	OFF	ON
	BACKGROUND EXTERNAL ZERO MEASURE	OFF	OFF	ON	ON	ON	OFF	ON
	BACKGROUND INTERNAL SPAN MEASURE	ON	ON	OFF	OFF	ON	OFF	ON
	BACKGROUND EXTERNAL SPAN MEASURE	OFF	OFF	ON	ON	ON	OFF	ON

H

THIRD ANGLE PROJECTION

TOLERANCES UNLESS SPECIFIED:
LINEAR: XX: ±0.5
XX.X: ±0.25
XX.XX: ±0.1
ANGULAR: ±2°30'
CONCENTRICITY: 0.10 FIM
MACH. FILLET RAD. 0.5 MAX
THREADS CLASS 2A OR 2B
SURFACE TEXTURE N7 TO N6

DO NOT SCALE THIS DRAWING

UNLESS OTHERWISE SPECIFIED, DIMENSIONS ARE IN MILLIMETRES. REMOVE BURRS AND SHARP EDGES.

Ecotech
1492 Ferntree Gully Road
Knoxfield, Australia, 3180

SCALE: N/A
SHEET SIZE: A4
SHEET 2 OF 2

MATERIALS:

THE INFORMATION CONTAINED IN THIS DRAWING IS THE SOLE PROPERTY OF ECOTECH. ANY REPRODUCTION IN PART OR AS A WHOLE WITHOUT THE WRITTEN PERMISSION OF ECOTECH IS PROHIBITED.

TITLE: PLUMBING SCHEMATIC, SERINUS 40, W/IZS

PART NO: D020052

S:\ECOTECH\ENGINEERING\CAD\D02\

9.11 Block Wiring Schematic – (PN: D020103-01)

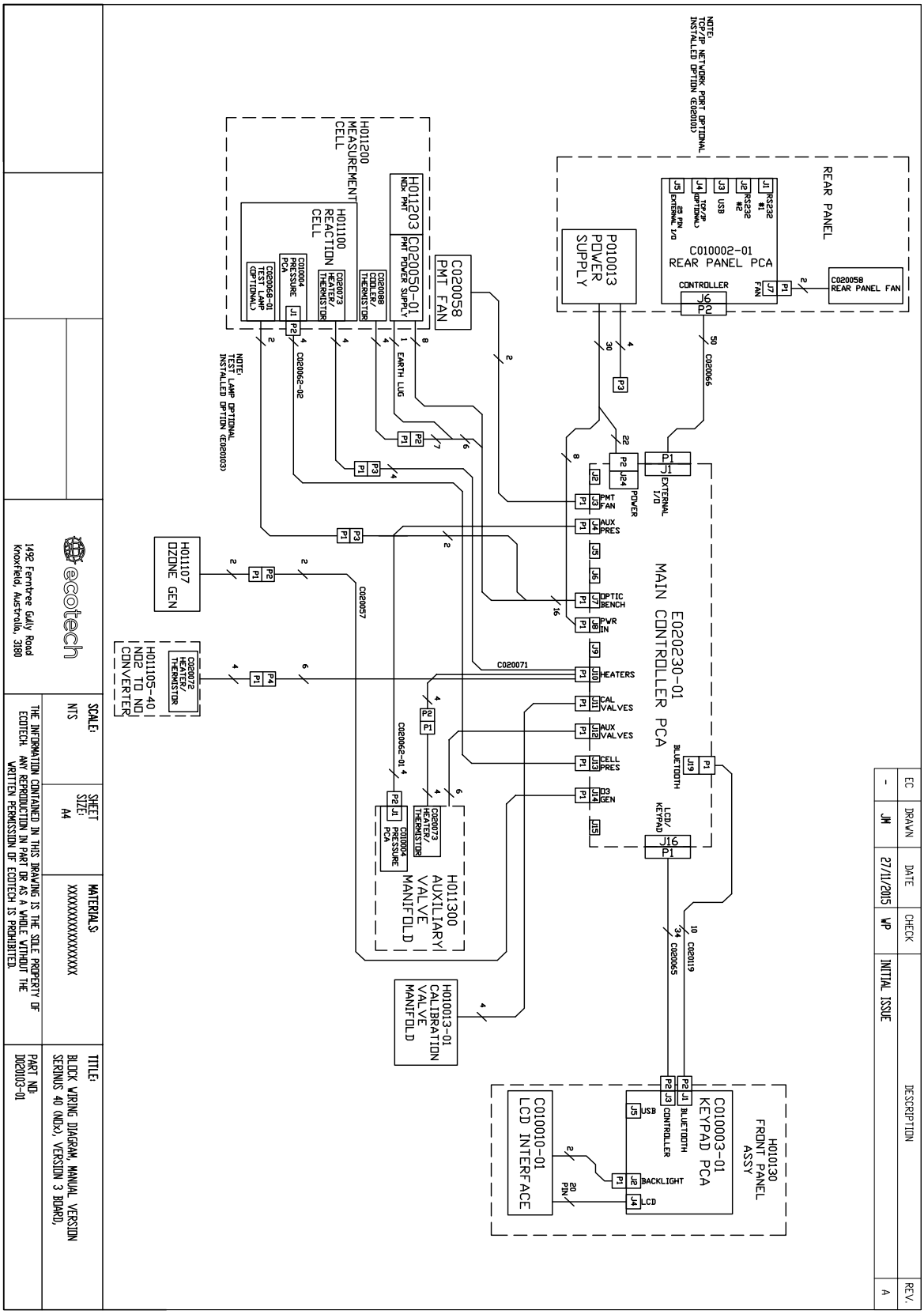

9.12 IZS Block Wiring Schematic – (PN: D020122-01)

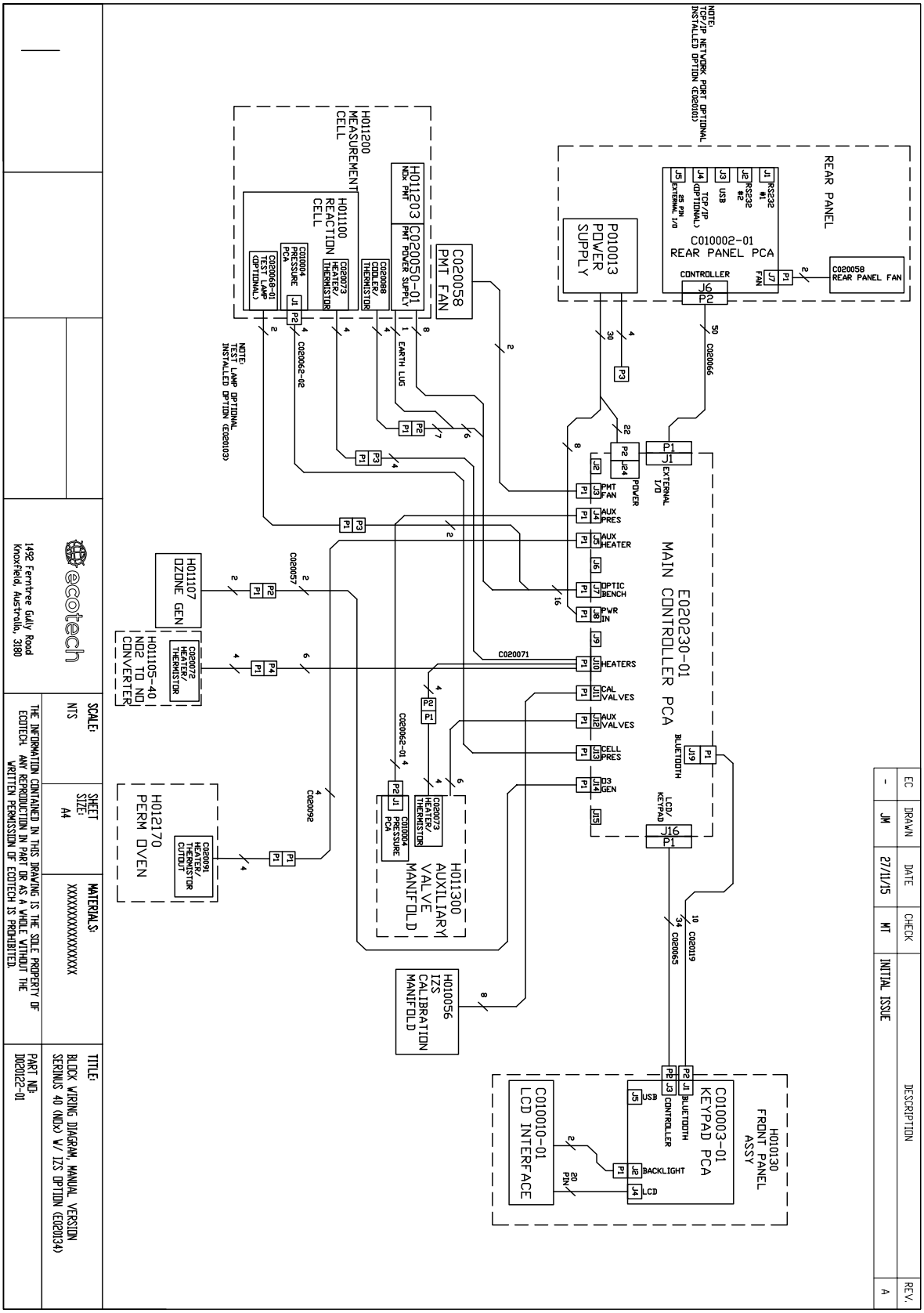

9.13 Measurement Cell and Reaction Cell Exploded View – (PN: H011200)

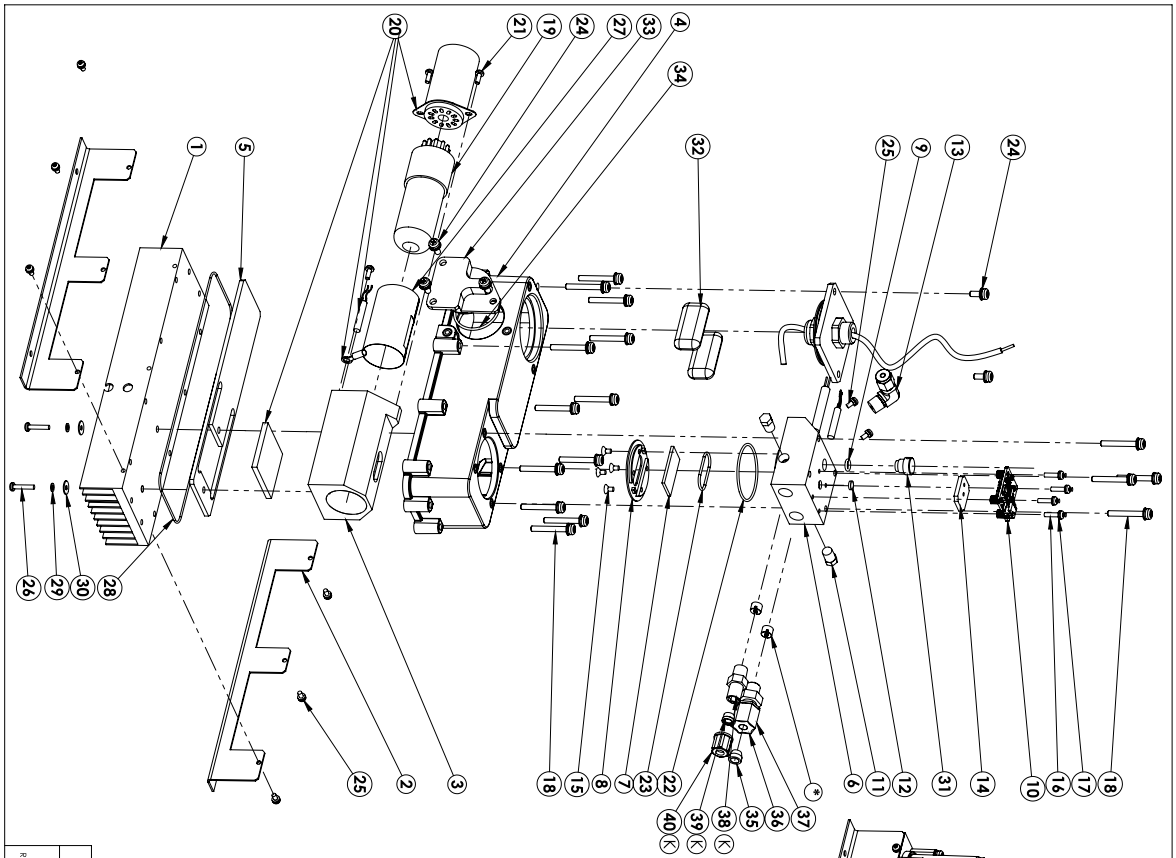

EC	DRAWN	DATE	CHECK	DATE	DESCRIPTION	REV.
7175	JM	16/09/2016	ND		2800114-1 WAS F030006-01	G
7171	ND	3/10/2016	JM		HOUSING H011212 REPLACES H011207, PLUG H011213, BS026 O-RING, AND 3x F050012 ADDED, H010033 ADDED, WAS MISSING FROM REV G.	H
7218	JM	10/10/2018	VC		ADDED F030020 & F030028, WAS 2800114-1	J
7358	SKS	4/05/2021	JAM	26/05/2021	FITTING UPDATED AS PER ECN	K

ITEM NO.	PART NUMBER	DESCRIPTION	QTY.
1	H011209	HEATSINK, SO2 AND NOX	1
2	H010006	BRACKET, HEATSINK, GAS ANALYZER	2
3	H011210	COLD BLOCK, SIDE ON PMT, GAS ANALYZER	1
4	H011212	HOUSING, OPT BENCH, INJ MOLDED	1
5	H011208	SPACER HEATSHIELD, H SINK	1
6	H011101	REACTION CELL, NOX	1
7	H011205	OPTICAL FILTER NOX	1
8	H011206	COVER OPTICAL FILTER	1
9	O010021	O-RING 0.208ID X 0.07W	1
10	C010004	PCA, PRESSURE GAUGE, GAS ANALYZER	1
11	F030015	FITTING, PIPE PLUG 1/16 NPT SS	2
12	F010004	FILTER SINTERED SS	1
13	F030025	FITTING SWAGELOK MALE ELBOW 1/8T - 1/8NPT S/S	1
14	H010037	GASKET,PRESSURE SENSOR	1
15	CSK M3 by 6	M4X6 CSK PHILLIPS SCREW	4
16	FAS-M32P-4	M3X12 PAN HEAD PHILLIPS SCREW	4
17	FAS-M32P-20	M3 SPRING WASHER	4
18	F050024	M4 X 30 SEMS	16
19	H011203	TUBE, SIDE ON PMT, R928 9841	1
20	C020050-01	POWER SUPPLY, C9057 9841, OLD P/N HC123-04	1
21	FAS-M3SS-2	M3X8 PAN HEAD PHILLIPS SCREW	3
22	O010017	O-RING 1 5/8 X 1/16, VITON 2030V7	1
23	O010016 - Swept	O-RING 13/16ID X 1/16W, VITON 2019V7	1
24	F050012	M4 X 10 SEMS	5
25	FAS-M3SS-1	M3X6 SEMS PAN HEAD PHILLIPS SCREW	8
26	PH38Y16	M3X16 PAN HEAD PHILLIPS SCREW	2
27	H011204	SHIELD REISIDE ON PMT	1
28	O010018	O-RING 5 3/4ID X 3/32W, VITON	1
29	F050040	M3x6 FLAT WASHER	2
30	F050041	WASHER, FLAT, M3 x 10mm, ZP	2
31	H010026	PLUG, TEST LAMP	1
32	C050014	DESSICANT 5 GRAM PACK	2
33	H011213	PLUG HOUSING, OPTICAL BENCH	1
34	2500041 9-4	O-RING 1.739ID X 0.07W, VITON	1
35	F030028	FERRULE PTFE STRAIGHT 1/4	1
36	F030020	FITTING KYNAR MALE CONNECTOR 1/4T - 1/8NPT	1
37	F030029	FITTING NUT 1/4T KYNAR STEEL GRIPPER FERRULE	1
38 (K)	F030200-01	MALE CONNECTOR, 1/4T-1/8NPT, COMPRESSION LUER	1
39 (K)	F030203-01	FERRULE, 1/4T, SUIT COMPRESSION, LUER FITTING	1
40 (K)	F030202-01	COMPRESSION NUT, 1/4T SUIT COMPRESSION, LUER FITTING	1
42	O010022	O-RING 1.739ID X 0.07W, VITON	1

DO NOT SCALE THE DRAWING

UNLESS OTHERWISE SPECIFIED: DIMENSIONS ARE IN MILLIMETERS. REMOVE BURRS AND SHARP EDGES.

acoem ECOTECH
1482 Ferntree Gully Road Knoxfield, Australia 3180

SCALE: NTS | SHEET SIZE: A3 | SHEET 1 OF 1 | MATERIALS: SEE BOM

TITLE: OPTICAL BENCH ASSY, NOX, GAS ANALYSER

PART NO: H011200

THE INFORMATION CONTAINED IN THE DRAWING IS THE SOLE PROPERTY OF ECOTECH. ANY REPRODUCTION IN PART OR AS A WHOLE WITHOUT THE WRITTEN PERMISSION OF ECOTECH IS PROHIBITED.

9.14 Auxiliary Valve Manifold Assembly Exploded View – (PN: H011300)

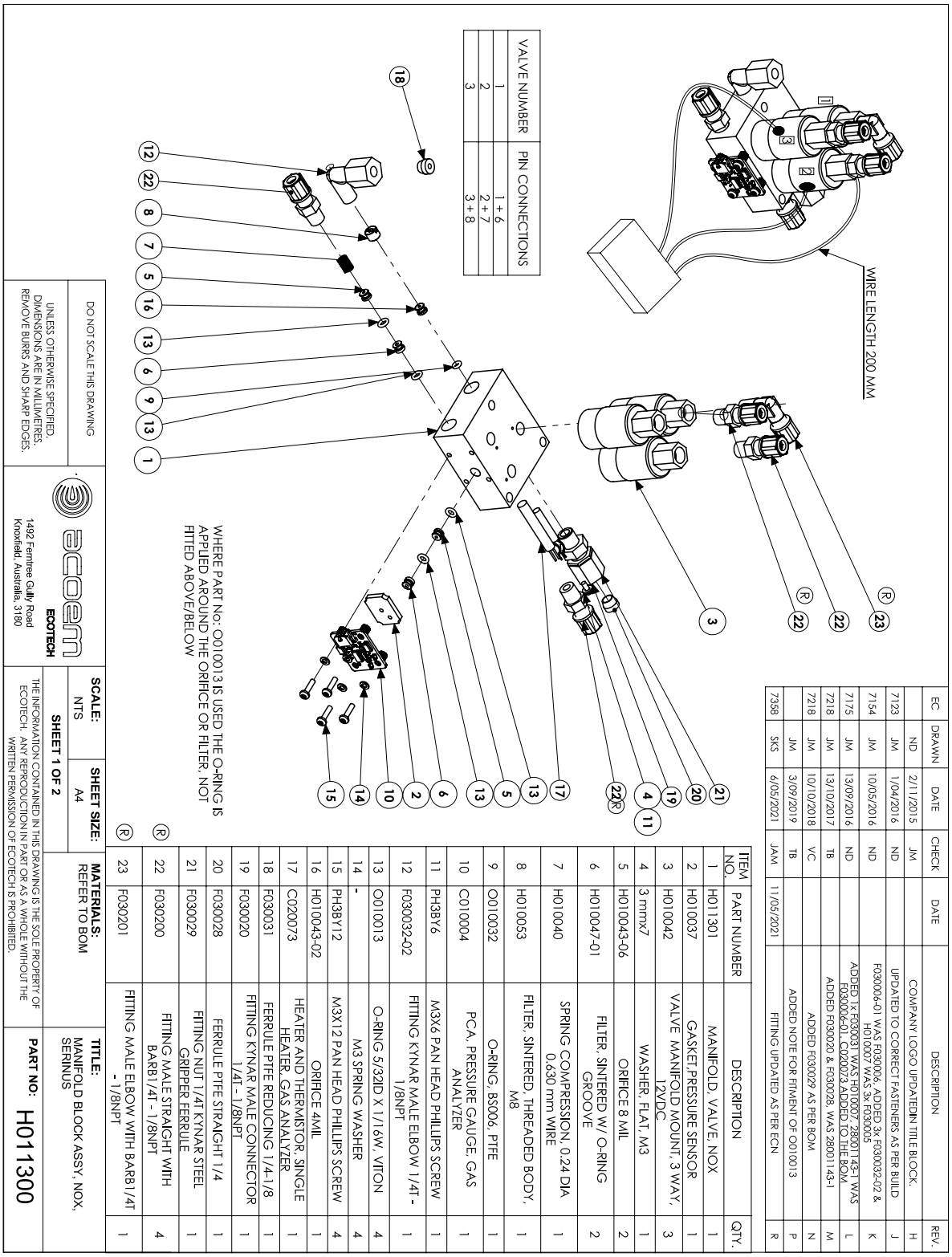

ITEM NO.	PART NUMBER	DESCRIPTION	QTY.
1	H011301	MANIFOLD, VALVE, NOX	1
2	H010037	GASKET,PRESSURE SENSOR	1
3	H010042	VALVE MANIFOLD MOUNT, 3 WAY, 12VDC	3
4	3 mmx7	WASHER, FLAT, M3	1
5	H010043-06	ORIFICE 8 MIL	2
6	H010047-01	FILTER, SINTERED W/ O-RING GROOVE	2
7	H010040	SPRING COMPRESSION, 0.24 DIA 0.630 mm WIRE	1
8	H010053	FILTER, SINTERED, THREADED BODY, M8	1
9	O010032	O-RING, BS006, PTFE	1
10	C010004	PCA, PRESSURE GAUGE, GAS ANALYZER	1
11	PH3BY6	M3X6 PAN HEAD PHILLIPS SCREW	1
12	F030032-02	FITTING KYNAR MALE ELBOW 1/4T - 1/8NPT	1
13	O010013	O-RING 5/32ID X 1/16W, VITON	4
14	-	M3 SPRING WASHER	4
15	PH3BY12	M3X12 PAN HEAD PHILLIPS SCREW	4
16	H010043-02	ORIFICE 4MIL	1
17	C020073	HEATER AND THERMISTOR, SINGLE HEATER, GAS ANALYZER	1
18	F030031	FERRULE PTFE REDUCING 1/4-1/8	1
19	F030020	FITTING KYNAR MALE CONNECTOR 1/4T - 1/8NPT	1
20	F030028	FERRULE PTFE STRAIGHT 1/4	1
21	F030029	FITTING NUT 1/4T KYNAR STEEL GRIPPER FERRULE	1
22	F030200	FITTING MALE STRAIGHT WITH BARB1/4T - 1/8NPT	4
23	F030201	FITTING MALE ELBOW WITH BARB1/4T - 1/8NPT	1

EC	DRAWN	DATE	CHECK	DATE	DESCRIPTION	REV.
	ND	2/11/2015	JM		COMPANY LOGO UPDATEDIN TITLE BLOCK.	H
7123	ND	1/04/2016	ND		UPDATED TO CORRECT FASTENERS AS PER BUILD	J
7154	JM	10/05/2016	ND		F030006-01 WAS F030004, ADDED 3x F030032-02 & H010007 WAS 3x F030005	K
7175	JM	13/09/2016	ND		ADDED 1X F030031 WAS H010007 28001143-1 WAS F030006-01, C020023 ADDED TO THE BOM	L
7218	JM	13/10/2017	TB		ADDED F030020 & F030028, WAS 28001143-1	M
7218	JM	10/10/2018	VC		ADDED F030029 AS PER BOM	N
	JM	3/09/2019	TB		ADDED NOTE FOR FITMENT OF C010013	P
7358	SKS	6/05/2021	JAM	11/05/2021	FITTING UPDATED AS PER ECN	R

9.15 Calibration Valve Manifold Assembly Exploded View – (PN: H010013-01)

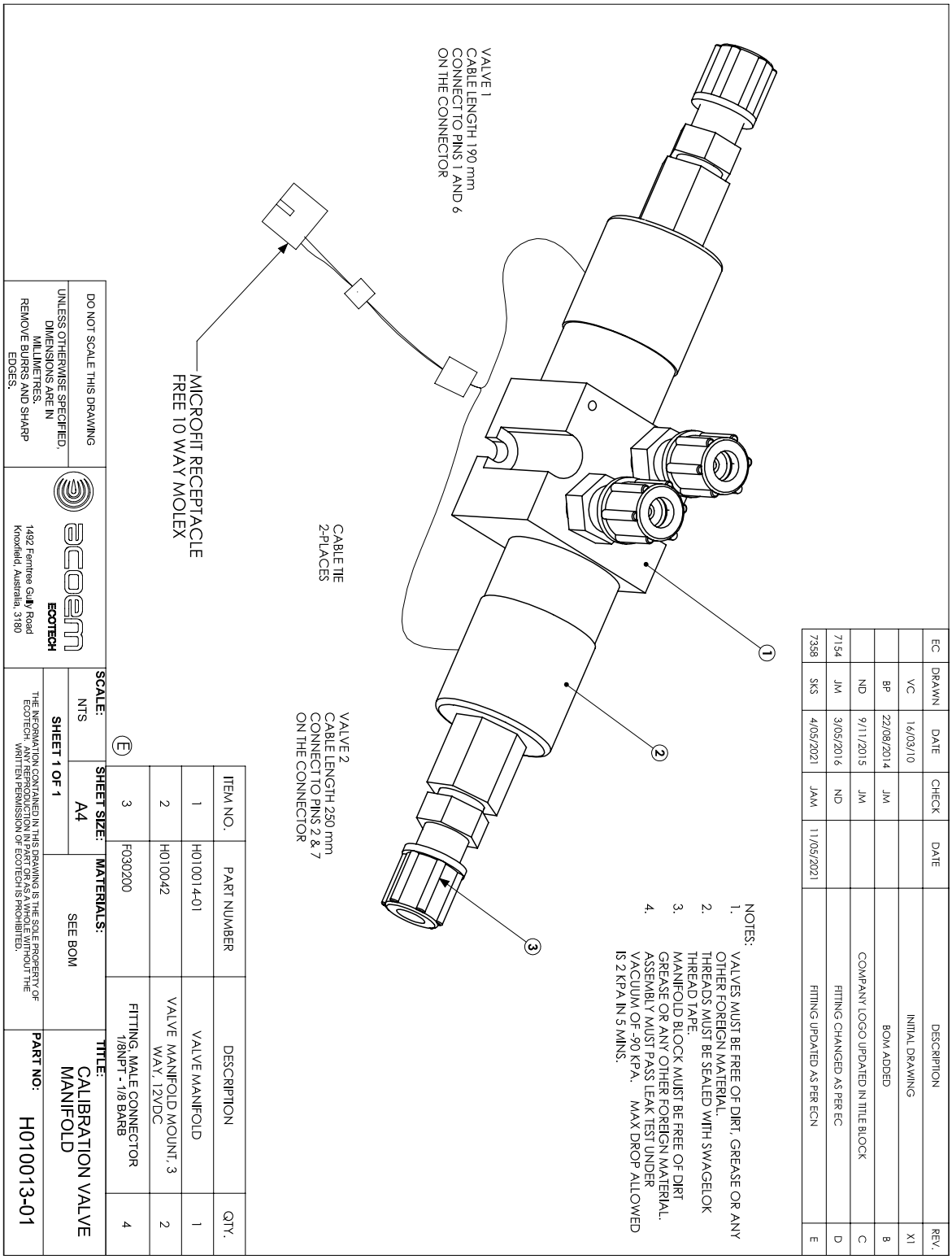

9.16 Ozone Generator Assembly Exploded View – (PN: H011107)

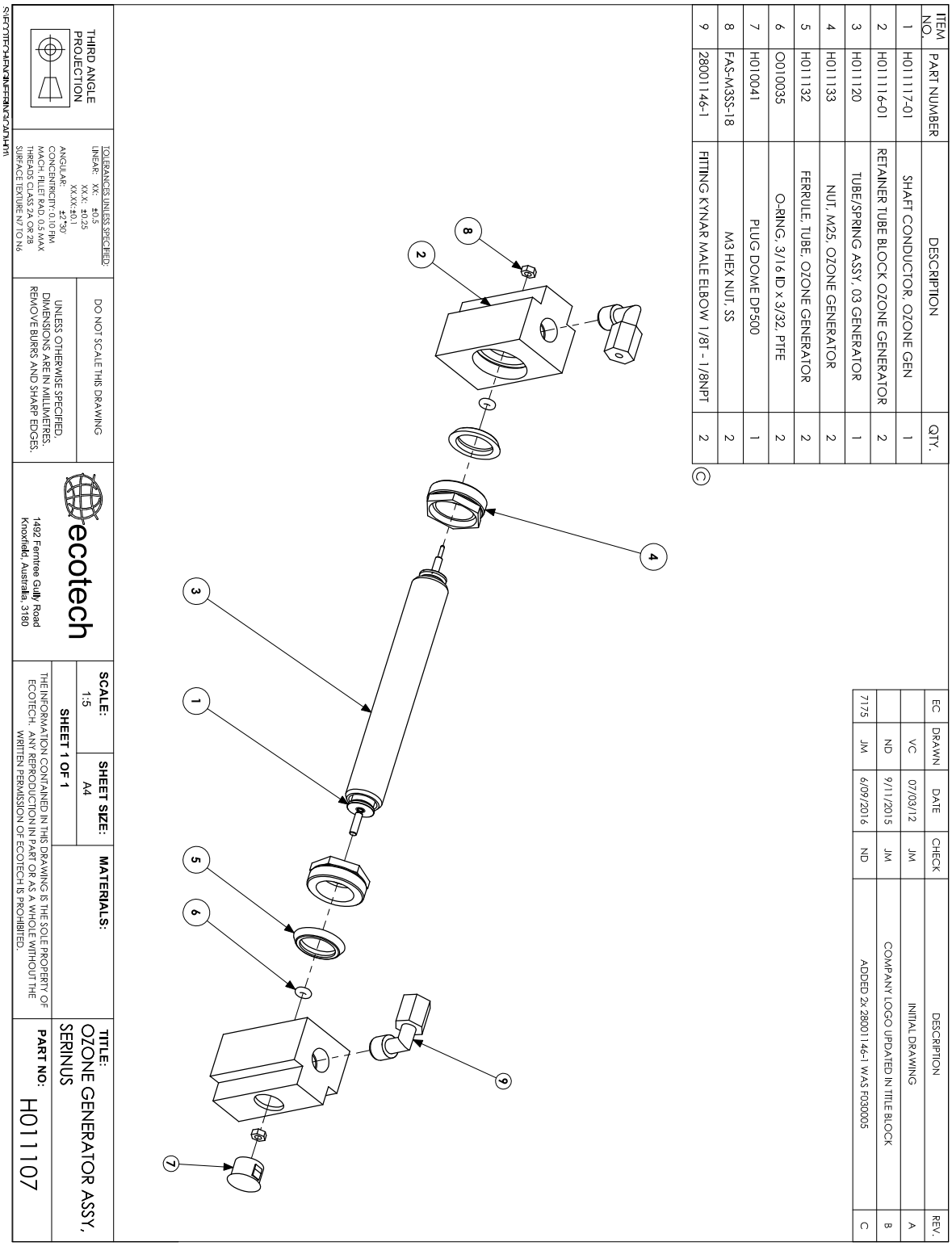

9.17 IZS Calibration Valve Manifold Assembly Exploded View – (PN: H010056)

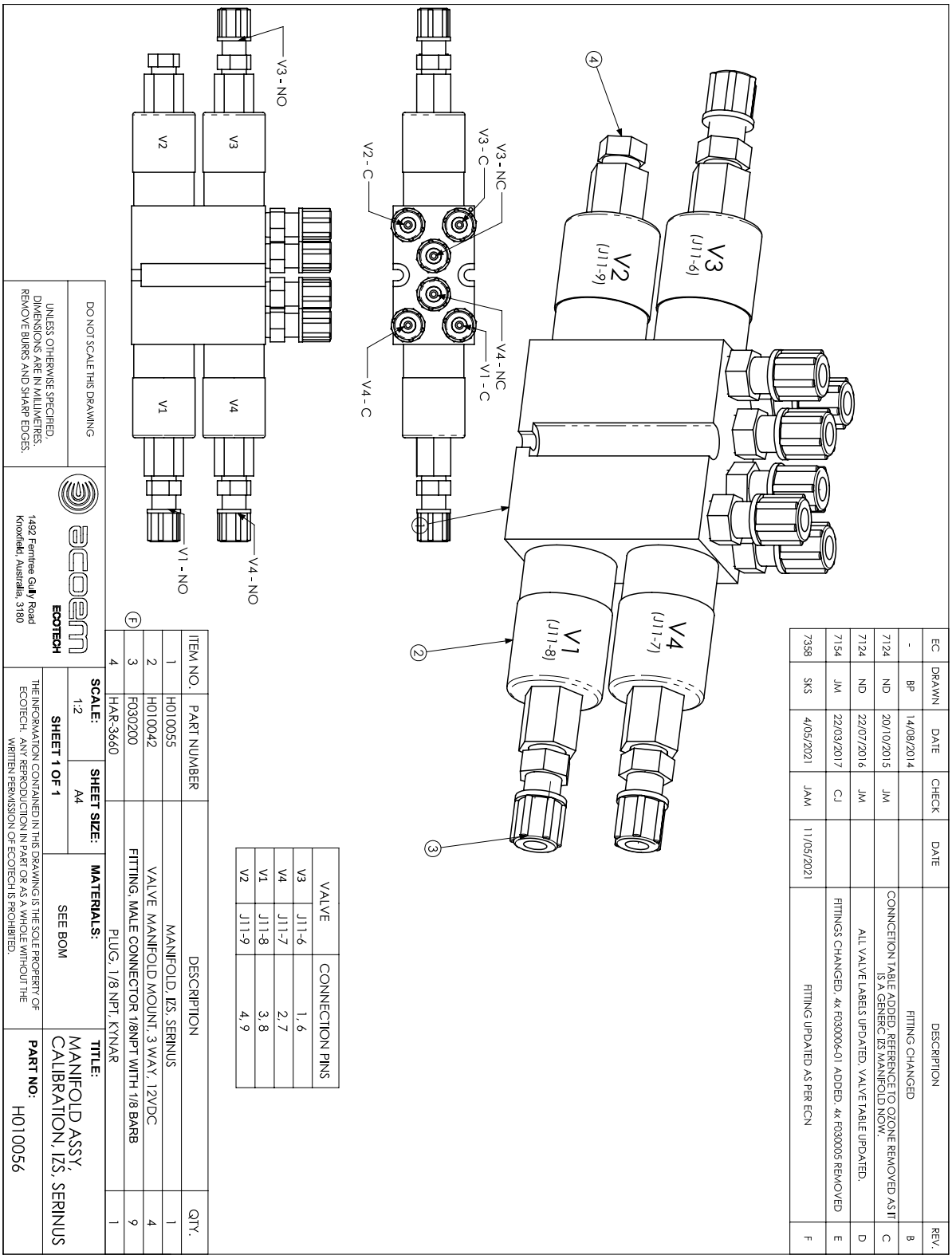

9.18 Permeation Oven Assembly Exploded View – (PN: H012170)

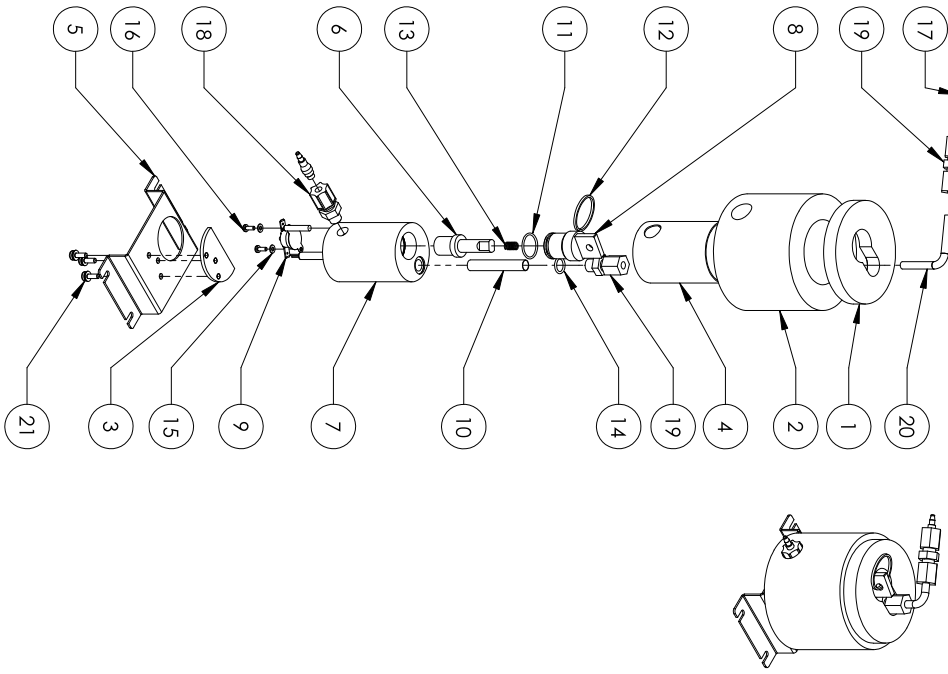

ITEM NO.	PART NUMBER	DESCRIPTION	QTY.
1	98000217	INSULATOR, FRONT, PERM CHAMBER	1
2	98000216	INSULATOR TUBE, PERM CHAMBER	1
3	98000220	INSULATOR, PERM CHAMBER BRACKET	1
4	95080027	INSULATOR, PERM CHAMBER	1
5	H011142	BRACKET, PERM OVEN	1
6	REF.	PERM TUBE (FOR REFERENCE)	1
7	98000212	PERM CHAMBER	1
8	98000213	PLUG, PERM CHAMBER	1
9	C020091	HEATER AND THERMISTOR ASSY, IZS, SERINUS	1
10	95080024	SCREEN, PERM CHAMBER	1
11	25000447-018	O-RING 3/4ID X 1/16W, VITON 2-018	1
12	28250003-221	SPLIT RING, ST-ZI, 1 1/4" DIA	1
13	H010040	SPRING COMPRESSION, 0.24 DIA 0.630 mm wire	1
14	O010011	O-RING 0.426ID X 0.070W	1
15	FAS-M3ZP-21	WASHER, FLAT, M3	2
16	PH3BY8	M3X8 PAN HEAD PHILLIPS SCREW	2
17	H010007	ADAPTOR, 1/4" FITTING TO 1/8" BARB	2
18	F030020	FITTING KYNAR MALE CONNECTOR 1/4T - 1/8NPT	1
19	F030022	FITTING KYNAR UNION 1/4T - 1/4T	2
20	TUB-1007	TUBING TEFLON 1/4 MEDIUM WALL 1/4 X 5/32 NAT FEP	80mm
21	F050023	M4 X 12 SEMS	3

EC	DRAWN	DATE	CHECK	DESCRIPTION	REV.
-	ND	13/08/2015	JM	INITIAL ISSUE	A

SCALE: 1:5 | SHEET SIZE: A4 | MATERIALS: SEE INDIVIDUAL COMPONENTS | TITLE: PERM OVEN ASSEMBLY, IZS, SERINUS

SHEET 1 OF 1

THE INFORMATION CONTAINED IN THIS DRAWING IS THE SOLE PROPERTY OF ECOTECH. ANY REPRODUCTION IN PART OR AS A WHOLE WITHOUT THE WRITTEN PERMISSION OF ECOTECH IS PROHIBITED.

PART NO: H012170

ecotech

1492 Ferntree Gully Road
Knoxfield, Australia, 3180

DO NOT SCALE THIS DRAWING

UNLESS OTHERWISE SPECIFIED, DIMENSIONS ARE IN MILLIMETRES. REMOVE BURRS AND SHARP EDGES.

THIRD ANGLE PROJECTION

TOLERANCES UNLESS SPECIFIED:
LINEAR XX: ±0.5
XX.X: ±0.25
XX.XX: ±0.127
ANGULAR ±2°00'
CONCENTRICITY: 0.10 FIM
MACH. FILLET RAD. 0.15 MAX
MACH. CHAMFER 0.2 X 45°
SURFACE TEXTURE N7 TO N6

S:\ECOTECH\ENGINEERING\CAD\H011

9.19 Valve Assembly Exploded View – (PN: H010042)

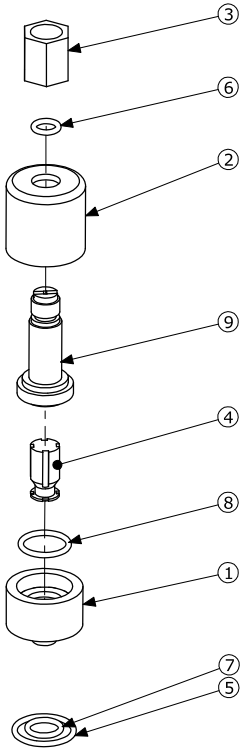

ITEM NO.	PART NUMBER	QTY.
1	BODY	1
2	SOLENOID COIL	1
10	NUT	1
4	PLUNGER	1
5	O010016	1
6	O010015	1
7	O010010	1
8	O010023	1
9	STEM	1

STEPS TO REPLACE O-RINGS:

1. MARK THE SOLENOID COIL WITH A PERMANENT MARKER TO IDENTIFY THEIR RESPECTIVE VALVES AND THEIR POSITION ON MANIFOLD BLOCK
2. SECURE THE 3-WAY VALVE UPRIGHT INTO A LARGE VICE WITH PROTECTION AROUND ITS BODY TO PREVENT SCRATCH OR DAMAGE TO VALVE
3. REMOVE NUT FROM THE TOP OF THE 3-WAY VALVE USING A 9/16" SPANNER
4. REMOVE SMALL O-RING FROM AROUND 3 WAY VALVE USING 2 MM FLAT SCREW DRIVER
5. LIFT OFF THE SOLENOID COIL FROM THE 3-WAY VALVE THEN UNCREW THE SHAFT FROM THE BASE USING A LARGE FLAT SCREW DRIVER. WHILE UNSCREWING TAKE CARE THAT THE INTERNAL PLUNGER DOES NOT FALL OUT
6. REPLACE THE INTERNAL O-RING WITH O010023
7. ASSEMBLE THE SHAFT ALONG WITH PLUNGER BACK IN ITS POSITION
8. ASSEMBLE THE SOLENOID WITH ITS RESPECTIVE VALVE.
9. ASSEMBLE NEW O010015 O-RING SUPPLIED
10. ASSEMBLE THE NUT ON TOP OF 3-WAY VALVE.
11. ASSEMBLE O010016 AND O010010 O-RINGS ON THE BOTTOM OF THE VALVE.
12. ASSEMBLE VALVE BACK IN MANIFOLD BLOCK

H010042

3 WAY VALVE SERVICE PROCEDURE

9.20 Sample Filter Holder Assembly – (PN: H010160)

ITEM NO.	PART NUMBER	DESCRIPTION	QTY.
1	H010161	BASE, SAMPLE FILTER, 47MM, SERINUS	1
2	H010152	CAP, SEALING, SAMPLE FILTER, SERINUS	1
3	H010153	SAMPLE FILTER 47MM RETAINING RING	1
4	O010054	O-RING, BS224, VITON	1
5	H010021	SAMPLE FILTER BRACKET	1
6	FAS-M4ZP-2	M4x8 ZP PAN PHILLIPS	2
7	F010006-02	FILTER, PAPER, 47mm, 5 MCRON, PTFE	1
8	F030200	FITTING MALE STRAIGHT WITH BARB1/4T - 1/8NPT	1 Ⓓ
9	F030201	FITTING MALE ELBOW WITH BARB1/4T - 1/8NPT	1 Ⓓ

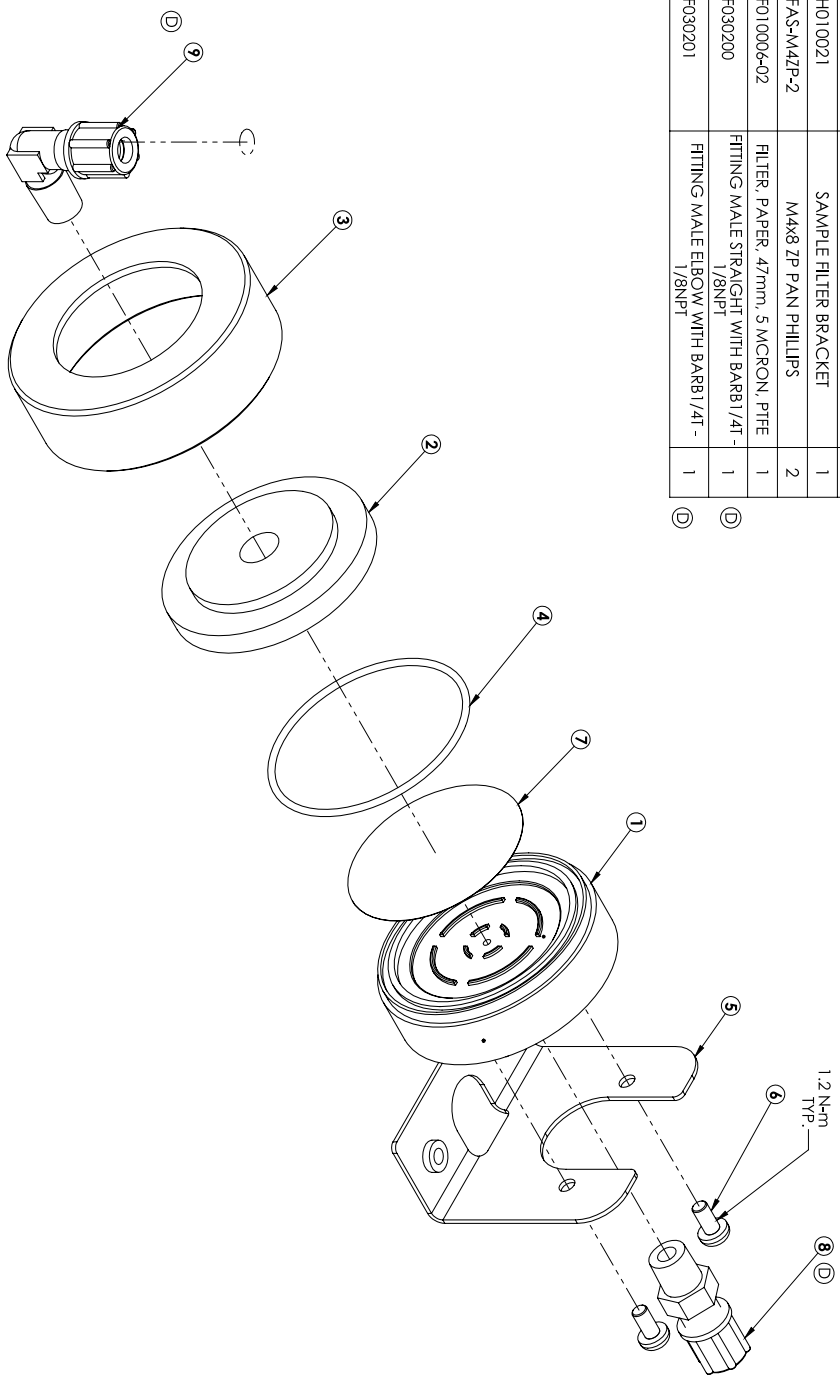

EC	DRAWN	DATE	CHECK	DATE	DESCRIPTION	REV.
7151	JM	09/04/2018	YC		INITIAL DRAWING	A
7151	JM	17/01/2019	YC		ADDED MISSING FILTER F010006-02	B
7398	JM	25/02/2021			ADDED FASTENERS TORQUE VALUE	C
7358	SKS	4/05/2021	JAM	11/05/2021	FITTING UPDATED AS PER ECN	D

DO NOT SCALE THIS DRAWING

UNLESS OTHERWISE SPECIFIED:
DIMENSIONS ARE IN MILLIMETRES.
REMOVE BURRS AND SHARP EDGES.

acoem ECOTECH
1492 Ferntree Gully Road
Knoxfield, Australia 3180

SCALE: NTS
SHEET SIZE: A3
SHEET 1 OF 1
MATERIALS: SEE BOM
TITLE: SAMPLE FILTER ASSY, FACE SEAL, SERINUS
PART NO: H010160

THE INFORMATION CONTAINED IN THIS DRAWING IS THE SOLE PROPERTY OF ECOTECH. ANY REPRODUCTION IN PART OR AS A WHOLE WITHOUT THE WRITTEN PERMISSION OF ECOTECH IS PROHIBITED.

9.21 High Pressure Valve Exploded View – (PN: H050043)

INSTRUMENT TYPE	ORIFICE PART NO.
S10 (O3)	H010043-09
S30/S31 (CO / CO2)	H010043-13
S40 (NOx)	H010043-11
S40H (NOx HIGH LEVEL)	H010043-03
S44 (NH3/NOx)	H010043-11
S5X (SO2, H2S/SO2, H2S, TS, TRS)	H010043-13

NOTES. (B)
1. FITTING TO BE MOUNTED FROM OUTSIDE OF INSTRUMENT IN FOLLOWING ORDER: FITTING, INSTRUMENT REAR PANEL, STAR WASHER, FLAT WASHER, RETAINING NUT
2. STAMPED 'V' ON FITTING DENOTES DIRECTION OF FLOW AND ORIENTATION OF VALVE
3. ASSEMBLY TO MOUNTED WITH VALVE END INSIDE OF INSTRUMENT

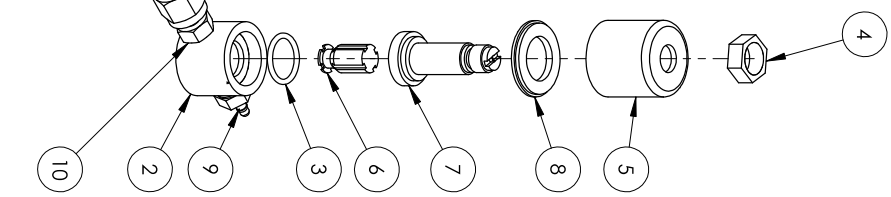

ITEM NO.	PART NUMBER	DESCRIPTION	QTY.
1	98300076	FITTING, BULKHEAD, 1/4T S/S, MODIFIED	1
2	BASE	BASE, VALVE, 2 WAY, 12 VDC	1
3	O010023	O-RING BS038, SILICONE	1
4	NUT	NUT, VALVE, 2 WAY, 12 VDC	1
5	COIL	SOLENOID COIL, VALVE, 2 WAY, 12 VDC	1
6	PLUNGER	PLUNGER, VALVE, 2 WAY, 12 VDC	1
7	STEM	STEM, VALVE, 2 WAY, 12 VDC	1
8	WASHER	WASHER, VALVE, 2 WAY, 12 VDC	1
9	F030006-01	FITTING, MALE CONNECTOR 1/8NPT - 1/8 BARB, KYNAR	1
10	28590462-3	Male Adapter (Tappered Thread)	1
11	H010043-XX	ORIFICE	1
12	O010013	O-RING 5/32ID X 1/16W, VITON	1
(B) 13	F050131	M12 INTERNAL STAR WASHER	1
(B) 14	F050130	WASHER, FLAT, M12, SS	1

REV.	DESCRIPTION	DATE	CHECK	DRAWN	EC
A	INITIAL ISSUE	04/12/2015	ND	JM	
B	ADDED M12 WASHERS AND NOTES FOR MOUNTING	7/08/2018	VC	JM	

TITLE: VALVE ASSY, HIGH PRESSURE, SERINUS
PART NO: H050043
MATERIALS: AS PER BOM
SHEET SIZE: A4
SCALE: 1:2
SHEET 1 OF 1

THE INFORMATION CONTAINED IN THIS DRAWING IS THE SOLE PROPERTY OF ECOTECH. ANY REPRODUCTION IN PART OR AS A WHOLE WITHOUT THE WRITTEN PERMISSION OF ECOTECH IS PROHIBITED.

Ecotech
1492 Ferntree Gully Road
Knoxfield, Australia 3180

DO NOT SCALE THIS DRAWING
UNLESS OTHERWISE SPECIFIED, DIMENSIONS ARE IN MILLIMETRES.
REMOVE BURRS AND SHARP EDGES.

TOLERANCES UNLESS SPECIFIED:
LINEAR: XX ±0.5, XXX ±0.25, XXXX ±0.1
ANGULAR: ±30'
CONCENTRICITY: 0.10 FIM
MACH. FILLET RAD. 0.5 MAX
THREADS CLASS 2A OR 2B
SURFACE TEXTURE N7 TO N6

THIRD ANGLE PROJECTION

S:\ECOTECH\ENGINEERING\CAD\H05\

9.22 NO_x Converter Assembly – (PN: H011105)

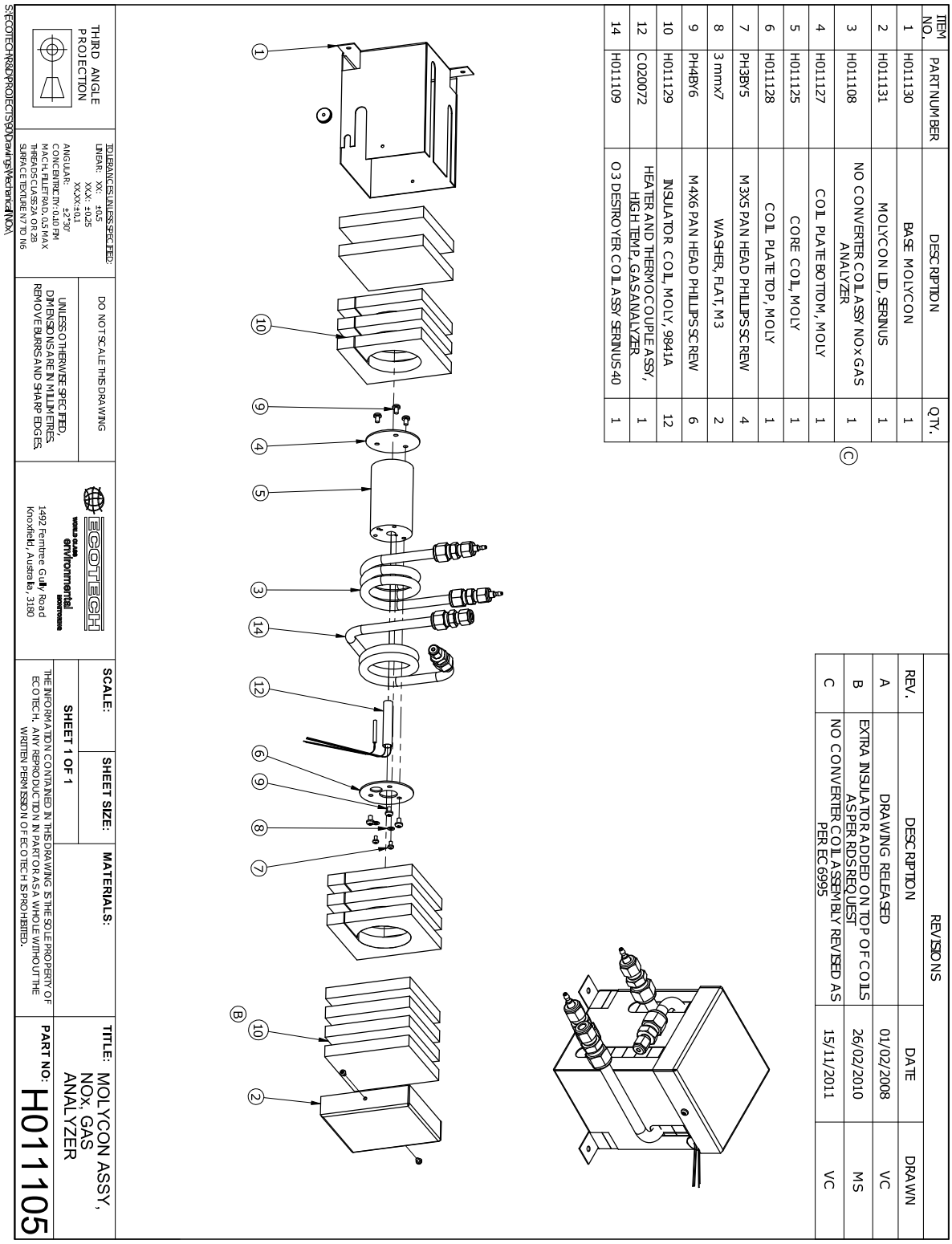

9.23 Internal Pump Assembly – (PN: H011140)

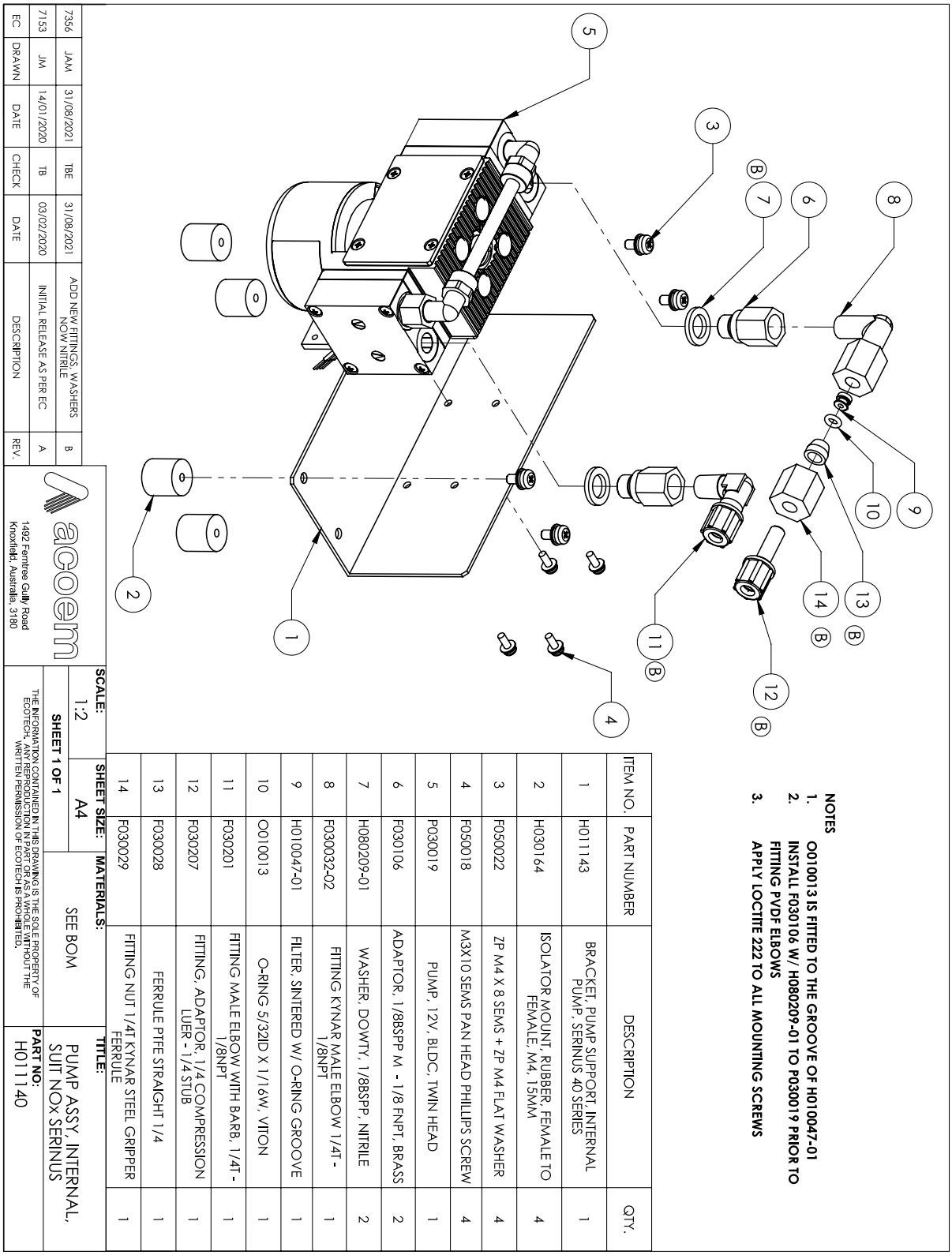

9.24 Dryer Assembly – (PN: H011106)

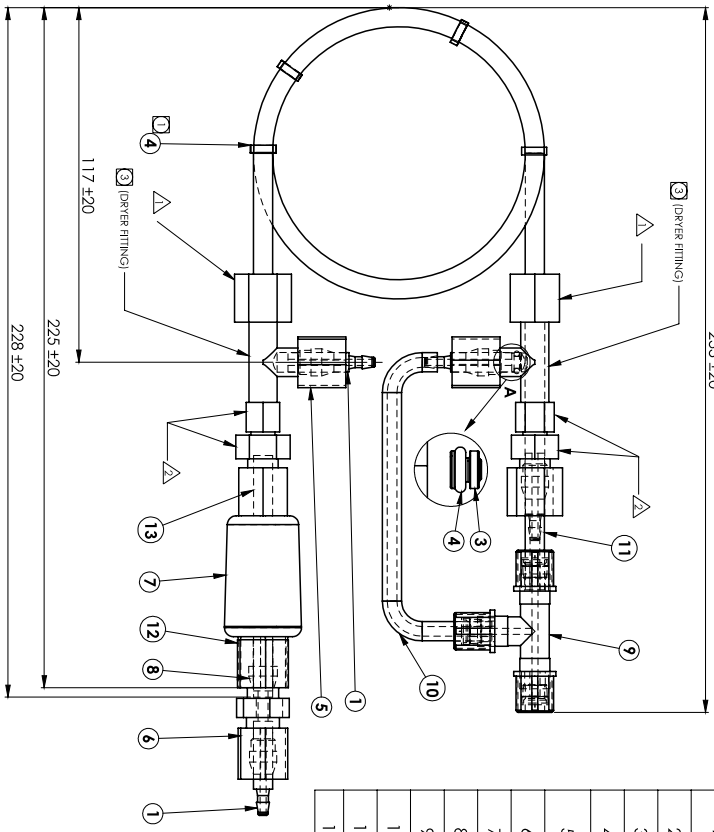

ITEM NO.	PART NUMBER	DESCRIPTION	QTY.
1	H010007	ADAPTOR, 1/4" FITTING TO 1/8" BARB	4
2	H010043-01	ORIFICE W/O-RING GROOVE, 3ML	1
3	O010013	O-RING 5/32ID X 1/16W, VITON	1
4	H030082	CABLE TIE WHITE 203 MM	4
5	F030024	FITTING NUT 1/4T KYNAR DOUBLE PLASTIC FERRULE	3
6	F030022	FITTING KYNAR UNION 1/4T - 1/4T	1
7	F010005	FILTER DFU 23 MICRON	1
8	F030028	FERRULE PTFE STRAIGHT 1/4	1
9	F030210	FITTING, UNION TEE 1/8 BARB	1
10	T010026	1/4" TUBING X 130 MM LONG	1
11	T010026	1/4" TUBING X 25 MM LONG	1
12	F030029	FITTING NUT 1/4T KYNAR STEEL GRIPPER FERRULE	1

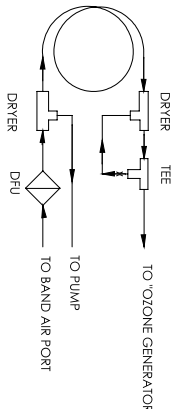

FLOW DIAGRAM

CAUTION:
1. DO NOT OVER TIGHTEN OR TWIST ENDS WHEN INSTALLING.
2. DO NOT "STRETCH" INNER TUBE OR TIGHTEN THIS CONNECTION WITHOUT LOOSENING CONNECTION AT CAUTION

DO NOT SCALE THIS DRAWING
UNLESS OTHERWISE SPECIFIED: DIMENSIONS ARE IN MILLIMETRES. REMOVE BURRS AND SHARP EDGES.

acoem
1492 Ferntree Gully Road
Knoxfield, Australia, 3180

SCALE:	SHEET SIZE:	MATERIALS:	TITLE:
NTS	A4	REFER TO BOM	DRYER ASSY, NOx, SERINUS
SHEET 1 OF 1			PART NO: H011106

THE INFORMATION CONTAINED IN THIS DRAWING IS THE SOLE PROPERTY OF ECOTECH. ANY REPRODUCTION IN PART OR AS A WHOLE WITHOUT THE WRITTEN PERMISSION OF ECOTECH IS PROHIBITED.

9.25 Flow Block Assembly – (PN: H013165)

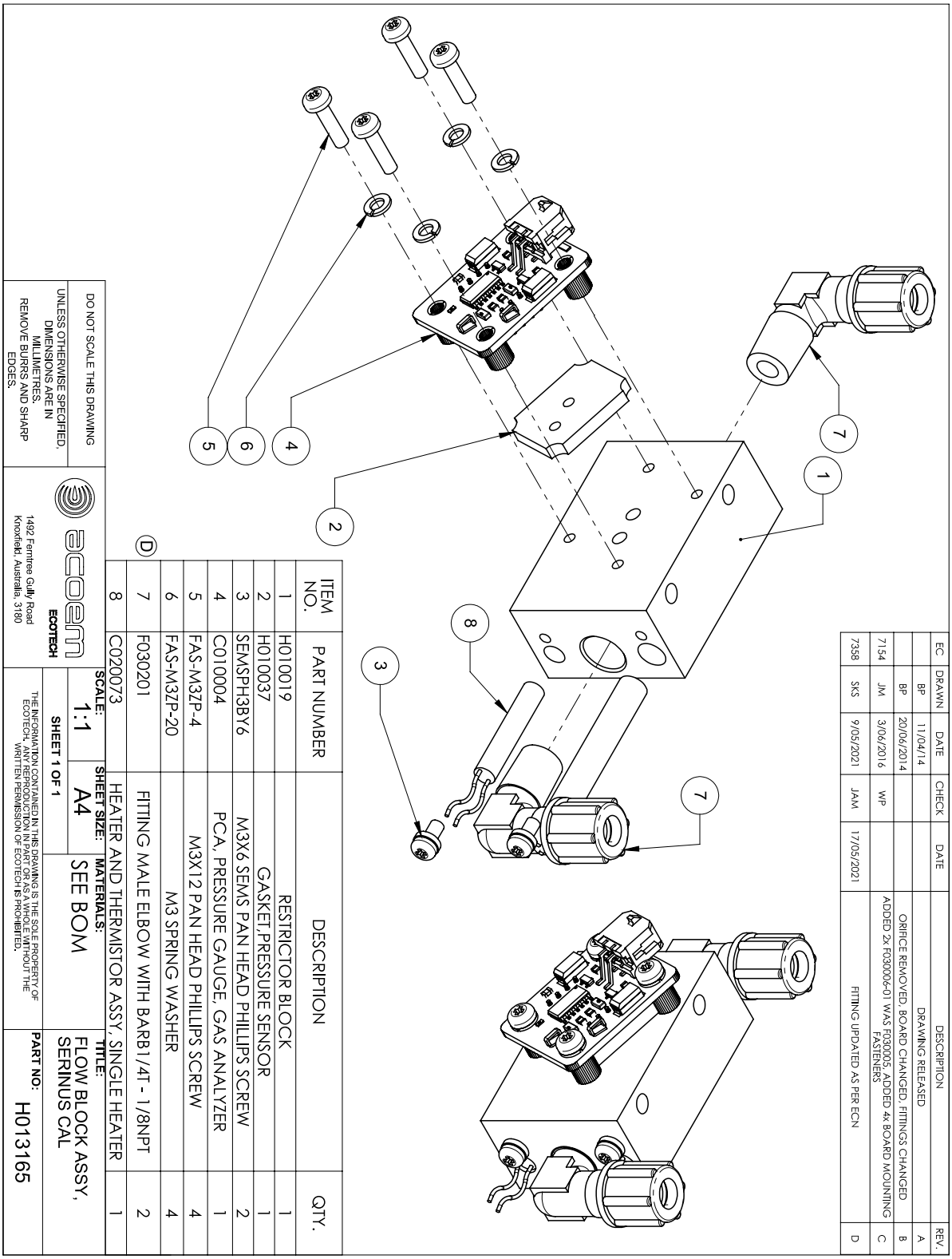

Appendix A. Advanced Protocol

The Advanced protocol allows access to the full list of instrument parameters.

A.1 Command Format

All commands and responses sent to and from the Instrument will be in the following packet format to ensure data is reliable.

Table 44 – Packet Format

1	2	3	4	5	6 … 5+n	6+n	7+n
STX (2)	Serial ID	Command	ETX (3)	Message Length (n)	Message	Checksum	EOT (4)

Where:

<STX>	ASCII Start of Text = 0x02 hex.
Serial ID	The Serial ID assigned in the **Main Menu → Communications Menu → Serial Communication Menu.**
<ETX>	ASCII End of Text = 0x03 hex.
Checksum	The XOR of the individual bytes except for STX, ETX, EOT and Checksum.
Message length	Must be in the range 0 - 32. Responses from the instrument can have a message Length of 0 - 255.
<EOT>	ASCII End of Transmission = 0x04 hex.

Examples

A basic request for Primary gas data would be as follows:

Table 45 – Example: Primary Gas Request

Byte Number	1	2	3	4	5	6	7	8
Description	STX	ID	Command	ETX	Message Length	Primary Gas Conc	Checksum	EOT
Value	2	0	1	3	1	50	50	4
Checksum Calculation		0	0⊕1=1		1⊕1=0	0⊕50=50	50	

And a sample response:

Table 46 – Example: Primary Gas Response

Byte Number	1	2	3	4	5	6	Continued in next table.
Description	STX	ID	Command	ETX	Message Length	Primary Gas Conc	
Value	2	0	1	3	5	50	
Checksum Calculation		0	0⊕1=1		1⊕5=4	4⊕50=54	

Table 47 – Example: Primary Gas Response (Continued)

Byte Number	7	8	9	10	11	12
Description	IEEE representation of 1.00				Checksum	EOT
Value	63	128	0	0	50	4
Checksum Calculation	54⊕63=9	9⊕128=137	137⊕0=137	137⊕0=137	137	

A.2 Commands

A.2.1 Communication Error

Where:

Command byte 0

Message byte 1 0

Message byte 2 0..7

If the command byte of a response is 0, this indicates an error has occurred. The message field will be 2 bytes long, where the 2nd byte indicates the error according to the following table.

Table 48 – List of Errors

Error #	Description
0	Bad Checksum received
1	Invalid Parameter Length
2	Invalid Parameter
3	Internal Data Flash Erase in Progress unable to return data for a few seconds
4	Unsupported Command.
5	Another process is collecting data – unable to service request.
6	MemStick No Connected
7	MemStick Busy

A.2.2 Get IEEE Value

Where:

Command byte 1

Message byte 1 Index from List of Parameters

Message byte 2..32 Additional indexes (optional)

This command requests the value of an instrument parameter. The message field byte contains the index of the parameter requested, as described in the List of Parameters.

Up to 32 indexes can be supplied in a single request. The response has 5 bytes for each parameter requested – the first byte is the parameter index and the next four are the IEEE representation of the current value.

Example

A request with a message field of 50,51,52 to a Serinus S40 would return a 15 byte message as shown below:

Table 49 – Example: Get IEEE Response data

1	2	3	4	5	6	7	8	9	10	11	12	13	14	15
50	NO reading				51	NO_x reading				52	NO_2 reading			

A.2.3 Set Calibration Mode

Where:

Command byte 4

Message byte 1 85

Message byte 2 – 5 The IEEE representation of 0, 1, 2, or 3

0 puts the instrument into Measure mode (0,0,0,0)

1 puts the instrument into Cycle mode (63,128,0,0)

2 puts the instrument into Zero mode (64,0,0,0)

3 puts the instrument into Span mode (64,64,0,0)

This command puts the instrument into a calibration mode (the same as going to the Calibration menu and choosing a Cal. Mode).

Example

A request with a command of 4 and a message field of 85,64,64,0,0 would place the instrument into Span mode.

A.2.4 Set Calibration

Enters a new calibration value: the same as entering Span Calibrate or Zero Calibrate on the calibration menu.

Where:

Command byte	18
Message byte 1	0, 1, 2, or 3 where
	0 = Span
	1 = Zero (first zero gas)
	2 = Zero (second zero gas)
	3 = Zero (Third zero gas)
Message byte 2 – 5	The IEEE representation of the calibration value.

A.3 List of Parameters

Note: Parameters are for all Serinus series analysers and may not be applicable to an individual instrument.

Table 50 – Advanced Protocol Parameter List

#	Description	Notes
1	Cal/Zero Valve	0 = Zero, 1 = Cal
2	Internal Span Valve	0 = OFF, 1 = ON
3	+Analog Supply	Positive analog supply voltage
4	Gas 5 Avg.	Average of the readings (for Gas5) of the last n minutes where n is the averaging period E.g. Nx
5	Pregain	S30H linearization coefficient gain
6	Sample/Cal Valve	0 = Sample, 1 = Cal/Zero
7	NOx Measure Valve	0 = NO, 1 = NOx
8	NOx Bypass Valve	0 = NO, 1 = NOx
9	NOx Backgnd Valve	0 = OFF, 1 = ON
10	Valve Sequencing	0 = OFF, 1 = ON
11	LCD Contrast Pot	0 = Lightest, 255 = Darkest
12	SO2 Ref Zero Pot	S50 Reference zero pot

13	CO Input Pot	S30 Input pot
14	CO Reference Test Pot	Not Used
15	CO Test Measure Pot	Not Used
16	High Volt Adjust Pot	PMT High Voltage Adjust Pot for S50 & S40
17	SO2 Lamp Adjust Pot	S50 Lamp adjustment Pot
18	O3 Lamp Adjust Pot	S10 Lamp adjustment Pot
19	O3 Meas. Zero Pot (C)	S10 Signal zero measure (coarse)
20	O3 Meas. Zero Pot (F)	S10 Signal zero measure (fine)
21	PMT Fan Pot	PMT assembly fan speed control pot
22	Rear Fan Pot	Chassis Fan speed control pot
23	Pump Fine Pot	Internal Pump speed fine pot
24	Pump Coarse Pot	Internal Pump speed coarse pot
25	Analog input 0	SO2 Reference signal
26	Analog input 1	CO Reference signal
27	Analog input 2	O3 Reference signal
28	Analog input 3	SO2 & O3 Lamp current
29	Analog input 4	Flow block pressure
30	Analog input 5	Cell pressure
31	Analog input 6	Ambient pressure
32	Analog input 7	Raw ADC calibration input
33	Analog input 8	Reserved
34	Analog input 9	Concentration data
35	Analog input 10	Reserved
36	Analog input 11	Reserved
37	Analog input 12	Raw analog to digital count for external analog input 0. 0 - 5 V = 0 - 32766 A/D counts
38	Analog input 13	Raw analog to digital count for external analog input 1. 0 - 5 V = 0 - 32766 A/D counts
39	Analog input 14	Raw analog to digital count for external analog input 2. 0 - 5 V = 0 - 32766 A/D counts
40	Analog input 15	Reserved
41	CO Meas Zero Pot (C)	S30 Measure ZERO coarse adjustment Pot
42	CO Meas Zero Pot (F)	S30 Measure ZERO fine adjustment Pot
43	SO2 Input Pot	SO2 Measure Signal Gain Pot
44	SO2 Ref. Gain Pot	SO2 Reference Signal Gain Pot
45	SO2 Meas. Zero Pot	SO2 Measure zero pot
46	O3 Input Pot	O3 Input signal gain pot

47	Diagnostic Test Pot	The Diagnostic mode adjustment pot for all the analysers except for S30
48	NOx Input Pot	PMT signal input gain control FOR NOx
49	PGA Gain	1, 2, 4, 8, 16, 32, 64, 128
50	Gas 1 Inst.	Primary gas concentration currently displayed on the front screen E.g. NO
51	Gas 2 Inst.	Secondary gas concentration currently displayed on front screen E.g. NOx
52	Gas 3 Inst.	Calculated gas concentration currently displayed on front screen E.g. NO_2
53	Gas 1 Avg.	Average of the readings (for Gas1) of the last n minutes where n is the averaging period
54	Gas 2 Avg.	Average of the readings (for Gas2) of the last n minutes where n is the averaging period
55	Gas 3 Avg.	Average of the readings (for Gas3) of the last n minutes where n is the averaging period
56	Instrument Gain	Current calibration value (default is 1.0)
57	Serial ID	Multidrop or Bayern-Hessen gas id
58	Bayern-Hessen ID	For multigas instruments only
59	Decimal Places	2 - 5
60	Noise	Instrument noise
61	Gas 1 Offset	An offset applied to Gas 1
62	Gas 3 Offset	An offset applied to Gas 3
63	Flow Temperature	Temperature of the flow block
64	Lamp Current	Lamp current in mA E.g 35mA
65	+5V Supply	Digital Supply voltage (should always read close to 5 volts)
66	Conc. Voltage	Concentration Voltage
67	High Voltage	High Voltage reading for PMT
68	Ozonator	0 = OFF, 1 = ON
69	Control Loop	0 = OFF, 1 = ON (default is ON)
70	Diagnostic Mode	0 = Operate 1 = Preamp 2 = Electrical 3 = Optical (default is Operate)
71	Gas Flow	Units in slpm
72	Gas Pressure	Units in torr
73	Ambient Pressure	Units in torr
74	+12V Supply	The 12 volt Power supply voltage

75	Cell Temperature	Cell Temperature
76	Conv. Temperature	Converter Temperature
77	Chassis Temperature	Chassis Temperature
78	Manifold Temp.	Manifold Temperature
79	Cooler Temperature	Cooler Temperature
80	Mirror Temperature	Mirror Temperature
81	Lamp Temperature	Lamp Temperature
82	O3 Gen. Lamp Temp.	O3 Lamp Temperature
83	Instrument Status	Each bit in this 4-byte word represents a different condition (not all conditions apply to every instrument model):

BIT	Condition if set
0	Currently in warmup process
1	Volumetric units (ppm); otherwise gravimetric units (mg/m3)
2	Performing a background
3	Currently in Span mode
4	Currently in Zero mode
5	Instrument Out of Service (or in Diagnostic mode, PTF compensation or control loop disabled, or Comms debugging enabled)
6	High Voltage failure
7	System power failure (not actually possible to report)
8	Reference voltage failure
9	Cell temperature failure
10	Cooler failure
11	Converter failure
12	Correlation wheel failure
13	Lamp source failure
14	Flow fault
15	Any system error (the red instrument panel light is ON)

84	Reference Voltage	Units in Volts	
85	Calibration State	This variable has two different sets of values:	
		Set Calibration State 0 = MEASURE 1 = CYCLE 2 = ZERO 3 = SPAN	Get IEEE Value 0 = MEASURE 1 = ZERO 2 = SPAN

86	Primary Raw Conc.	(For S40, before NOx background and gain)
87	Secondary Raw Conc.	Only for multigas instruments (For S40, before NOx background and gain)
88	S40 Backgnd Conc.	NOx Background Concentration (For S40, before gain)
89	Cal. Pressure	Calibration Pressure
90	Conv. Efficiency	Converter Efficiency
91	Multidrop Baud Rate	0 = 1200 bps 1 = 2400 bps 2 = 4800 bps 3 = 9600 bps 4 = 14400 bps 5 = 19200 bps 6 = 38400 bps
92	Anlg Range AO 0	Maximum range value for analog output
93	Anlg Range AO 1	
94	Anlg Range AO 2	
95	Output Type AO 0	Output Type 1 = Voltage 0 = Current
96	Output Type AO 1	
97	Output Type AO 2	
98	Anlg Ofst/Rng AO 0	Voltage Offset /Current Range 0 = 0% or 0 - 20mA 1 = 5% or 2 - 20mA 2 = 10% or 4 - 20mA
99	Anlg Ofst/Rng AO 1	
100	Anlg Ofst/Rng AO 2	
101	F/Scale Volt AO 0	5.0 Volt Calibration value
102	F/Scale Volt AO 1	
103	F/Scale Volt AO 2	
104	Z Adj Volt AO 0	0.5 Volt Calibration value
105	Z Adj Volt AO 1	
106	Z Adj Volt AO 2	
107	-Analog Supply	Negative analog supply
108	Digital Outputs	A single byte expressing the most recent state of the digital outputs
109	Digital Inputs	A single byte expressing the most recent state of the digital inputs
110	Instrument State	0 = Sample Fill 1 = Sample Measure 2 = Sample Fill Aux 3 = Sample Measure Aux 4 = Sample Fill Aux2 5 = Sample Measure Aux2

		6 = Background Fill 7 = Background Measure 8 = Background Purge 9 = Background Fill Aux 10 = Background Measure Aux 11 = Zero Fill 12 = Zero Measure 13 = Zero Fill Aux 14 = Zero Measure Aux 15 = Zero Fill Aux2 16 = Measure Aux2 17 = Background Fill Zero 18 = Background Measure Zero 19 = Span Fill 20 = Span Measure 21 = Span Fill Aux 22 = Span Measure Aux 23 = Span Fill Aux2 24 = Span Measure Aux2 25 = Background Fill Span 26 = Background Measure Span 27 = Background Purge Span 28 = Electronic Zero Adjust 29 = Instrument Warm Up 30 = Background Adjust Fill 31 = Background Adjust Measure
111	CO Lin. Factor A	CO Linearisation Factor A
112	CO Lin. Factor B	CO Linearisation Factor B
113	CO Lin. Factor C	CO Linearisation Factor C
114	CO Lin. Factor D	CO Linearisation Factor D
115	CO Lin. Factor E	CO Linearisation Factor E
116	Instrument Units	0 = ppm 1 = ppb 2 = ppt 3 = mg/m³ 4 = µg/m³ 5 = ng/m³ 6 = %
117	Backgnd Meas. Time	In seconds. These parameters can be changed, but only temporarily; restarting the instrument will restore them to their default values.
118	Sample Fill Time	
119	Sample Measure Time	

120	Aux Measure Time	
121	Aux Smpl. Fill Time	
122	Backgnd Fill Time	
123	Zero Fill Time	
124	Zero Measure Time	
125	Span Fill Time	
126	Span Measure Time	
127	O3 Gen. Coeff D	O3 Generator Coefficient D
128	Backgnd Pause Time	In seconds
129	Bkgnd Intrleav Fact	
130	Cal. Pressure 2	Calibration Pressure for 2nd gas
131	2nd Instrument Gain	Only valid with an S40 variant set to multiple gains. Shows the second gas gain (NO). Default is 1.0.
132	Background voltage	Units in Volts
133	Perm Rate	Permeation rate of the gas in ng/min
134	Perm Flow	Total flow past the permeation chamber during an activated internal span mode. In ml/min
135	Perm Oven Setpoint	Set target temperature for the permeation oven. Default is 50 °C
136	Perm Oven Temp	Temperature readout of the Permeation oven. Units in °C
137	Ozone Target	Ozone Target for S10 IZS Ozone generation
138	Conc Adjusted 1	Concentration value in PPM before filtering
139	Conc Adjusted 2	
140	Conc Adjusted 3	
141	Chopper Speed	Revolutions in the last second
142	Chopper Frequency	In rpm
143	IR Source	The S30 IR source voltage
144	Background (hrs)	The background interval in hours. 0.0 if disabled 0.25 for every 15 minutes 0.30 for every 20 minutes 0.50 for every 30 minutes 1.00 for every hour 24.00 for once a day
145	Cycle Time	In minutes
146	CO Cooler Pot	CO Cooler voltage adjustment POT
147	CO Source Pot	CO Source voltage adjustment POT
148	CO Test Meas. Pot	Diagnostics use only

149	CO Test Ref. Pot	Diagnostics use only
150	O3 Ref Average	S10 Background Average
151	PTF Correction (gas 1)	Pressure Temperature Flow Compensation Factor for first gas
152	PTF Correction (gas 2)	Pressure Temperature Flow Compensation Factor for second gas in dual gas analysers.
153	Inst. Cell Pressure	Instantaneous cell pressure
154	Manifold Pressure	Manifold Pressure in S40 instruments
155	Cell Press. (gas 1)	Cell Pressure for Gas 1
156	Cell Press. (gas 2)	Cell Pressure for Gas 2
157	Cell Press. (Bgnd)	Cell Pressure when in Background
158	Background	0 = the instrument is measuring a gas sample 1 = the instrument is measuring background air
159	Gas To Measure	S51 only; see Measurement Settings Menu 0 = Measure both gasses 1 = Measure SO2 only 2 = Measure H2S only
160	Valve States	Diagnostic use only
161	Temperature Units	0 = "°C" 1 = "°F" 2 = "K"
162	Pressure Units	0 = "torr" 1 = "psi" 2 = "mbar" 3 = "atm" 4 = "kPa"
163	Averaging Period	0 = "1 Min" 1 = "3 Mins" 2 = "5 Mins" 3 = "10 Mins" 4 = "15 Mins" 5 = "30 Mins" 6 = "1 Hr" 7 = "4 Hrs" 8 = "8 Hrs" 9 = "12 Hrs" 10 = "24 Hrs" Added as of V 3.57.001 11 = ”4 hrs/hr” 12 = ”8 hrs/hr” Added as of Build 10800 (V3.87.0 or later) 13 = “2 Mins”

		14 = “4 Mins” 15 = “6 Mins” 16 = “12 Mins” 17 = “20 Mins” 18 = “2 Hrs” 19 = “6 Hrs”
164	Filter Type	0 = NO FILTER 1 = KALMAN FILTER 2 = 10 SEC FILTER 3 = 30 SEC FILTER 4 = 60 SEC FILTER 5 = 90 SEC FILTER 6 = 300 SEC FILTER 7 = ADPTIVE FILTER
165	NO_2 Filter enabled	0 = Disabled, 1 = Enabled
166	Background Interval	0 = 24 Hrs 1 = 12 Hrs 2 = 8 Hrs 3 = 6 Hrs 4 = 4 Hrs 5 = 2 Hrs 6 = Disable Note: this parameter is deprecated; while it can still be read, writing to it will have no effect. Use parameter 144 instead.
167	Service (COM1) Baud	Serial baud rate 0 = 1200 bps 1 = 2400 bps 2 = 4800 bps 3 = 9600 bps 4 = 14400 bps 5 = 19200 bps 6 = 38400 bps
168	Multidrop (COM2) Baud	
169	Service Protocol	0 = EC9800 1 = Bayern-Hessen 2 = Advanced 3 = Modbus
170	Multidrop Protocol	
171	AO1 Over Range	The Upper Concentration Range when Over-Ranging is enabled
172	AO2 Over Range	
173	AO3 Over Range	
174	AO1 Over-Ranging	0 = Over Ranging Disabled 1 = Over Ranging Enabled
175	AO2 Over-Ranging	

176	AO3 Over-Ranging	2 = Over Ranging enabled and currently active
177	Heater Set Point	Cell Heater Set Point units in °C
178	High Volt Adjust Pot	High voltage pot setting
179	PMT Test LED Pot	PMT Test LED intensity controller POT
180	Last Power Failure	Time Stamp of the Last power fail (4 byte time stamp) Bit 31:26 ---- Year (0 – 99) Bit 25:22 ---- Month (1 – 12) Bit 21:17 ---- Date (1 – 31) Bit 16:12 ---- Hour (00 – 23) Bit 11:06 ---- Min (00 – 59) Bit 05:00 ---- Sec (00 – 59)
181	Inst Manifold Press.	Manifold Pressure in S40 instruments (instantaneous)
182	Cell Press. (Gas 5)	Cell Pressure for Gas 5 (Nx)
183	Gas 4 Inst.	Calculated gas concentration currently displayed on front screen E.g. NH3
184	Gas 4 Avg.	Average of the readings (for Gas 4) of the last n minutes where n is the averaging period E.g. NH3
185	Gas 5 Inst.	Calculated gas concentration currently displayed on front screen E.g. Nx
186	NH3 Conv. Efficiency	
187	Cell/Lamp Duty Cycle	
188	Mirror T. Duty Cycle	
189	Flow Temp Duty Cycle	
190	Cooler T. Duty Cycle	
191	Conv Temp Duty Cycle	
192	CO Conv T Duty Cycle	
193	F/Scale Curr AO 0	20 mA Calibration value
194	F/Scale Curr AO 1	
195	F/Scale Curr AO 2	
196	Z Adj Curr AO 0	4 mA Calibration value
197	Z Adj Curr AO 1	
198	Z Adj Curr AO 2	
199	Ext Analog Input 0	The value of the external analog input after the multiplier and offset have been applied
200	Ext Analog Input 1	
201	Ext Analog Input 2	
202	Conv Set Point	Converter Set Point
203	Cal. Pressure 3	Calibration Pressure 3

204	PTF Correction (gas 3)	Pressure Temperature Flow Compensation Factor for third gas in multi-gas instruments.
205	Dilution Ratio	The current dilution ratio (default is 1.0)
206	Traffic Light	State of the status light: 0 = Green 1 = Amber 2 = OFF (normally impossible) 3 = Red
207	Network Protocol	0 = EC9800 1 = Bayern-Hessen 2 = Advanced 3 = Modbus
208	Gas 4 Offset	An offset applied to Gas 4
209	O3 Gen. Fine Pot	Ozone generator control, DAC controlled. DAC: 0..64535
210	O3 Gen. Lamp Current	Units in mA
211	O3 Gen. Coarse Pot	Repeat of parameter 209
212	Logging Period	The data logging period, in seconds (1.. 86400)
213	O3 Gen. Coeff A	Ozone generator coefficients Note that Coeff D is parameter 127
214	O3 Gen. Coeff B	
215	O3 Gen. Coeff C	
216	Meas. Count	S60 measure count
217	Sig. Count 1	S60 signal counts
218	Sig. Count 2	
219	Sig. Count 3	
220	Sig. Count 4	
221	Signal Voltage	S60 signal voltage
222	LED Drive	S60 LED drive value
223	3rd Instrument Gain	Only valid with an S44 variant set to multiple gains. Shows the third gas gain (Nx). Default is 1.0.
224	Legacy PTF Method	Only applies to S40 variants. 0 = new PTF calculation 1 = old PTF calculation inherited from ML This value was added to Build 10800 and defaults to 1.
225	Chassis Humidity	Only applies to S30 variants, and only on Rev P or later boards. The current humidity inside the instrument, in percentage.
226	Opto. Strength	Only applies to Rev P or later boards. Optical signal strength.

Appendix B. EC9800 Protocol

The Serinus implements a subset of the 9800 instrument protocol. Only the basic commands of reading the concentration value and setting the instrument calibration state (measure, span or zero) are supported.

B.1 Command Format

All commands are sent as ASCII strings. Fields are delimited by commas and the command ends with the normal return key (i.e. the TERMINATOR is either a <CR> or a <LF>). The DEVICE I.D. is the Serial ID assigned in the **Main Menu → Communications Menu → Serial Communication Menu**. If the instrument is not being used in a multi-drop connection, the DEVICE I.D> can be replaced with the string "???".

B.2 Commands

B.2.1 DCONC

Function: Sends the current instantaneous concentration data to the serial port.

Format: DCONC, {<DEVICE I.D.>} {TERMINATOR}

Device response: {GAS} <SPACE> {STATUS WORD} <CR><LF>

The GAS value is the concentration value in the current instrument units, expressed as a floating point number (i.e. 12.345). The STATUS WORD indicates the instrument status in hex (i.e. A01F) using the following format:

Bit 15 = SYSFAIL (MSB)

Bit 14 = FLOWFAIL

Bit 13 = LAMPFAIL

Bit 12 = CHOPFAIL

Bit 11 = CVFAIL

Bit 10 = COOLERFAIL

Bit 9 = HEATERFAIL

Bit 8 = REFFAIL

Bit 7 = PS-FAIL

Bit 6 = HV-FAIL

Bit 5 = OUT OF SERVICE

Bit 4 = Instrument is in zero mode

Bit 3 = Instrument is in span mode

Bit 2 = Unused

Bit 1 = SET→PPM selected, CLEAR→MG/M3

Bit 0 = reserved (LSB)

B.2.2 DSPAN

Function: Commands the instrument to enter span mode.

Format: DSPAN, {<DEVICE I.D.>} {TERMINATOR}

Device response: <ACK> if the instrument is able to perform the command, <NAK> if not.

B.2.3 DZERO

Function: Commands the instrument to enter the zero mode.

Format: DZERO, {<DEVICE I.D.>} {TERMINATOR}

Device response: <ACK> if the instrument is able to perform the command, <NAK> if not.

B.2.4 ABORT

Function: Commands the instrument to abort the current span/zero mode and return to measure mode.

Format: ABORT, {<DEVICE I.D.>} {TERMINATOR}

Device response: <ACK> if the instrument is able to perform the command, <NAK> if not.

B.2.5 RESET

Function: Reboots the instrument (software reset).

Format: RESET, {<DEVICE I.D.>} {TERMINATOR}

Device response: <ACK>.

Appendix C. Bayern-Hessen Protocol

The Serinus implements a limited subset of the Bayern-Hessen Network protocol. Only the ability to set the instrument calibration state (measure, span or zero) and read the gas concentrations are supported.

C.1 Command Format

<STX><text><ETX>< bcc1><bcc2>

Where:

<STX> ASCII Start of Text = 0x02 hex.

<Text> ASCII text maximum length of 160 characters.

<ETX> ASCII End of Text = 0x03 hex.

<bcc1> ASCII representation of block check value MSB. (That is, the character "3" for 3, the character "F" for 15, etc.)

<bcc2> ASCII representation of block check value LSB.

The block check algorithm begins with 0 and exclusive-OR's each ASCII character from <STX> to <ETX> inclusive. This block check value is converted to ASCII format and sent after the <ETX> character.

Examples

This is an example of a valid Bayern-Hessen data request for an instrument that has a Serial ID of 97 (Serial ID assigned in the **Main Menu → Communications Menu → Serial Communication Menu**):

<STX>DA097<EXT>3A

The block check calculation is best shown by the following example:

Table 51 – Bayern-Hessen Data

Character	Hex Value	Binary	Block Check
<STX>	02	0000 0010	0000 0010
D	44	0100 0100	0100 0110
A	41	0100 0001	0000 0111
0	30	0011 0000	0011 0111
9	39	0011 1001	0000 1110
7	37	0011 0111	0011 1001
<ETX>	03	0000 0011	0011 1010

The binary value 0011 1010 corresponds to the hex value 3A. This value in ASCII forms the last two characters of the data request message.

Note: The I.D. of 97 is sent as the sequence 097. All I.D. strings must have three digits and must always be padded with ASCII zero characters.

This is an example of a valid command to put the unit in the manual span mode if the instrument has an ID of 843:

<STX>ST843 K<ETX>52

The block check operation is best shown with the following table:

Table 52 – Block Check Operation

Character	Hex Value	Binary	Block Check
<STX>	02	0000 0010	0000 0010
S	53	0101 0011	0101 0001
T	54	0101 0100	0000 0101
8	38	0011 1000	0011 1101
4	34	0011 0100	0000 1001
3	33	0011 0011	0011 1010
<SPACE>	20	0010 0000	0001 1010
K	4B	0100 1011	0101 0001
<ETX>	03	0000 0011	0101 0010

The binary block check value is 0101 0010 which is the hex value 52 as shown at the end of the command string.

C.2 Commands

C.2.1 DA

Return the current instantaneous concentration.

Command Format

<STX>{DA}{<kkk>}<ETX>< bcc1><bcc2>

Where:

kkk — Device's ID. This field is optional, but if provided it must be padded with zeros to be 3 characters long. The value must match one of the following: the instrument's Bayern-Hessen ID, 000, or ??? (three question marks).

bcc1 — First byte of the block check calculation.

bcc2 — Second byte of the block check calculation.

Device response

The instrument responds with a variable length string, depending on how many measured gasses have been assigned an ID above 0. The text between the [ ] will be repeated once for each reported gas.

<STX>{MD}{cc}[<SP><kkk><SP><+nnnn+ee><SP><ss><SP><ff><SP><mmm><SP>eeeeee<SP>]<ETC><bcc1><bcc2>

Where:

<SP>	Space (0x20 hex).
cc	The number of gasses reported (0..5). The text in between the [ ] will be repeated once for each gas reported.
kkk	The Bayern-Hessen instrument ID.
+nnnn+ee	Gas concentration.
ss	Status byte (see table below for individual bits).
ff	Failure byte (see table below for individual bits).
mmm	Gas ID.
Eeeeee	Ecotech instrument ID.
bcc1	First byte of the block check calculation.
bcc2	Second byte of the block check calculation.

Table 53 – Status Bit Map

Status Bit	Meaning if set to 1
0	Instrument OFF (this value is always set to 0).
1	Out of service.
2	Zero mode.
3	Span mode.
4	-
5	-
6	Units: 1 = Volumetric, 0 = Gravimetric.
7	Background mode (S30 and S50 family only).

Table 54 – Failure Bit Map (Positive Logic)

Failure Bit	Meaning if set to 1
0	Flow sensor failure.
1	Instrument failure. Note that while the In Maintenance mode reports as an instrument failure

Failure Bit	Meaning if set to 1
	with a red light on the front panel, for Bayern-Hessen this particular error is merely a status instead of a failure.
2	-
3	Lamp failure (S40 family only).
4	-
5	Cell heater failure (S30, S40 and S50 family only).
6	-
7	-

C.2.2 ST

Set the instrument mode.

Command Format

<STX>{ST}{< kkk>}<SP>{command}<ETC><bcc1><bcc2>

Where:

kkk — Device's Serial ID. This field is optional, but if provided it must be padded with zeros to be 3 characters long. The value must match one of the following: the instrument's Bayern-Hessen ID, 000, or ??? (three question marks).

Command — M, N or K for Measure, Zero or Span mode.

bcc1 — First byte of the block check calculation.

bcc2 — Second byte of the block check calculation.

Device response

The device does not issue a response to this command.

Appendix D. ModBus Protocol

The Serinus supports a limited Modbus implementation. The only function codes supported are 3 (read holding register) and 16 (write multiple registers). The Serial ID is assigned in the **Main Menu → Communications Menu → Serial Communication Menu.**

D.1 Command Format

<Slave address><Function code><Start register (MSB)><Start register <LSB><Register count (MSB)><Register count (LSB)><Write byte count><Write data><CRC (MSB)><CRC (LSB)>

Where:

Slave address	The instrument Serial ID. If the request is being made via TCP, this field is omitted.
Function code	3 (read) or 16 (write).
Start register	Specifies an Advanced Protocol IEEE index (refer to Table 50 to see what values are available and what index to specify for them). The ModBus index is calculated from the Advanced Protocol index via the following formula: Mobus Index = Advanced Protocol Parameter List number x 2 + 256
Register count	A single read command may request from 2 - 124 registers, which is to say from 1 - 62 values. The first index is specified by Start register; all following indexes are in sequential order. To read values that are not sequential requires using another read command. Note that the number of registers must be even, as each value is returned as a floating point value (4 bytes) and each register is a word (2 bytes). A write command can only write a single IEEE value at a time. Thus for write commands this value must be 2.
Write byte count	This field is only supplied for a write request; it indicates the amount of bytes of data that will follow, and must be set to 4 (since only one value can be written at a time).
Write data	This field is only supplied for a write request. It is the value to be written, expressed in IEEE format. The “Endian” structure can be selected on the Modbus Serial Communications menu. Big Endian means that the MSB byte of the IEEE value is at the right end of the four bytes; Little Endian means it is at the left.
CRC	Calculated by the standard Modbus CRC method. If the request is being made via TCP, this field is omitted.

D.2 Commands

D.2.1 Read Holding Registers

The response to a read request is in the following format:

<Slave address>3<Register count (MSB)><Register count (LSB)><Data><CRC (MSB)><CRC (LSB)>

Where:

Slave address	As general command format.
Register count	As general command format.
Data	4 - 248 bytes of data, representing 1 - 62 floating point numbers in IEEE format. The "Endian" structure can be selected on the Modbus Serial Communications menu. Big Endian means that the MSB byte of the IEEE value is at the right end of the four bytes; Little Endian means it is at the left.
CRC	As general command format.

D.2.2 Write Holding Register

The only supported use for this command is to set the instrument into a calibration state.

Where:

Start register MSB	1
Start register LSB	170
Register count	2
Write Data bytes	The IEEE representation of 0, 1, 2, or 3
	0 puts the instrument into Measure mode (0,0,0,0)
	1 puts the instrument into Cycle mode (63,128,0,0)
	2 puts the instrument into Zero mode (64,0,0,0)
	3 puts the instrument into Span mode (64,64,0,0)

The response to a write request is to return the first six bytes of the initiating write request.

D.2.3 Error

An error will be returned in the following format:

<Slave address><Function code><Exception code><CRC (MSB)><CRC (LSB)>

Slave address	As general command format.
Function code	The initiating command's function code + 128; so either 131 (read) or 144 (write).
Exception code	The error code (see table below).
CRC	As general command format.

Table 55 – Modbus Error Codes

Value	Error
1	Illegal Function
2	Illegal Data Address
3	Illegal Data Value
4	Slave Device Failure

Met One Instruments

POWERED BY ACOEM

metone.com

User manual subject to change without notice. Images used are for illustrative purposes only.
All trademarks and registered trademarks are the property of their respective owners.
© 2022 Acoem and all related entities. All rights reserved.